YAMAHA

YFM660R(N) 2001

5LP2-AE1

SERVICE MANUAL

YFM660R(N) 2001
SERVICE MANUAL

First Edition, July 2000

EB001000

NOTICE

This manual was produced by the Yamaha Motor Company primarily for use by Yamaha dealers and their qualified mechanics. It is not possible to include all the knowledge of a mechanic in one manual, so it is assumed that anyone who uses this book to perform maintenance and repairs on Yamaha machine has a basic understanding of the mechanical ideas and the procedures of machine repair. Repairs attempted by anyone without this knowledge are likely to render the machine unsafe and unfit for use.

Yamaha Motor Company, Ltd. is continually striving to improve all its models. Modifications and significant changes in specifications or procedures will be forwarded to all authorized Yamaha dealers and will appear in future editions of this manual where applicable.

NOTE:
Designs and specifications are subject to change without notice.

IMPORTANT INFORMATION

Particularly important information is distinguished in this manual by the following notations.

⚠	The Safety Alert Symbol means ATTENTION! BECOME ALERT! YOUR SAFETY IS INVOLVED!
⚠ WARNING	Failure to follow WARNING instructions could result in severe injury or death to the machine operator, a bystander or a person inspecting or repairing the machine.
CAUTION:	A CAUTION indicates special precautions that must be taken to avoid damage to the machine.
NOTE:	A NOTE provides key information to make procedures easier or clearer.

EB002000

HOW TO USE THIS MANUAL

MANUAL ORGANIZATION

This manual consists of chapters for the main categories of subjects. (See “Illustrated symbols”)

1st title ①: This is the title of the chapter with its symbol in the upper right corner of each page.

2nd title ②: This title indicates the section of the chapter and only appears on the first page of each section. It is located in the upper left corner of the page.

3rd title ③: This title indicates a sub-section that is followed by step-by-step procedures accompanied by corresponding illustrations.

EXPLODED DIAGRAMS

To help identify parts and clarify procedure steps, there are exploded diagrams at the start of each removal and disassembly section.

1. An easy-to-see exploded diagram ④ is provided for removal and disassembly jobs.
2. Numbers ⑤ are given in the order of the jobs in the exploded diagram. A number that is enclosed by a circle indicates a disassembly step.
3. An explanation of jobs and notes is presented in an easy-to-read way by the use of symbol marks ⑥. The meanings of the symbol marks are given on the next page.
4. A job instruction chart ⑦ accompanies the exploded diagram, providing the order of jobs, names of parts, notes in jobs, etc.
5. For jobs requiring more information, the step-by-step format supplements ⑧ are given in addition to the exploded diagram and the job instruction chart.

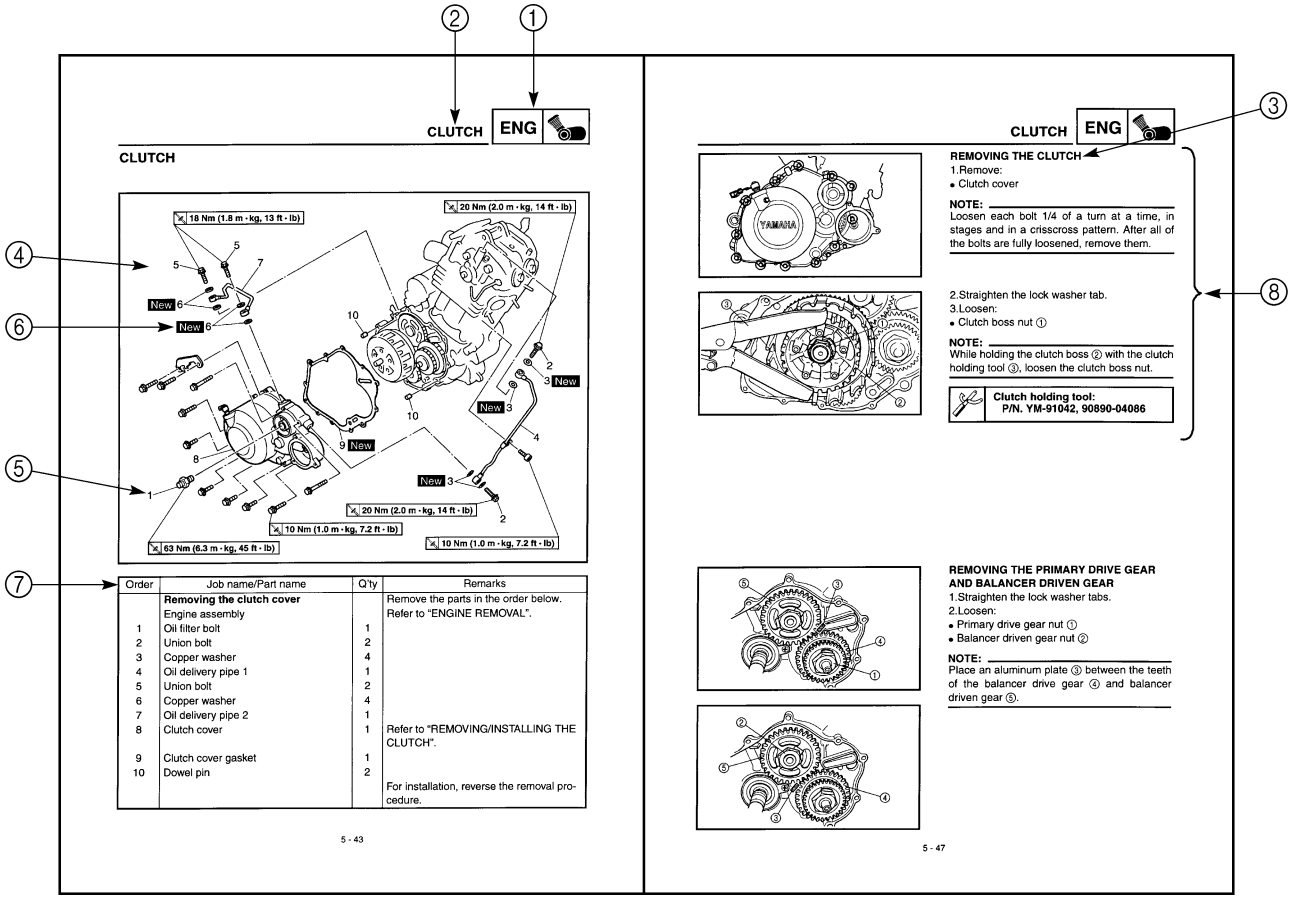

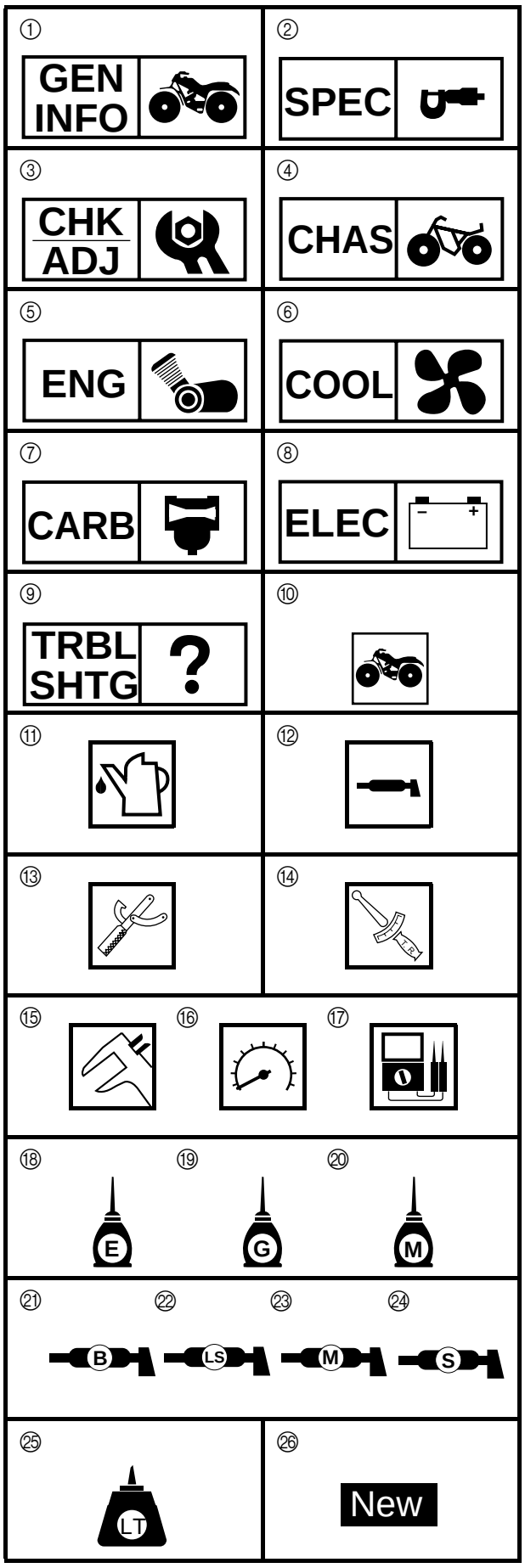

EB003000

ILLUSTRATED SYMBOLS

Illustrated symbols ① to ⑨ are printed on the top right of each page and indicate the subject of each chapter.

① General information
② Specifications
③ Periodic checks and adjustments
④ Chassis
⑤ Engine
⑥ Cooling system
⑦ Carburetion
⑧ Electrical
⑨ Troubleshooting

Illustrated symbols ⑩ to ⑰ are used to identify the specifications appearing in the text.

⑩ Can be serviced with engine mounted
⑪ Filling fluid
⑫ Lubricant
⑬ Special tool
⑭ Torque
⑮ Wear limit, clearance
⑯ Engine speed
⑰ Ω, V, A

Illustrated symbols ⑱ to ㉔ in the exploded diagrams indicate the types of lubricants and lubrication points.

⑱ Apply engine oil
⑲ Apply gear oil
⑳ Apply molybdenum disulfide oil
㉑ Apply wheel bearing grease
㉒ Apply lightweight lithium soap base grease
㉓ Apply molybdenum disulfide grease
㉔ Apply silicon grease

Illustrated symbols ㉕ to ㉖ in the exploded diagrams indicate where to apply a locking agent ㉕ and when to install a new part ㉖.

㉕ Apply the locking agent (LOCTITE®)
㉖ Replace

TABLE OF CONTENTS

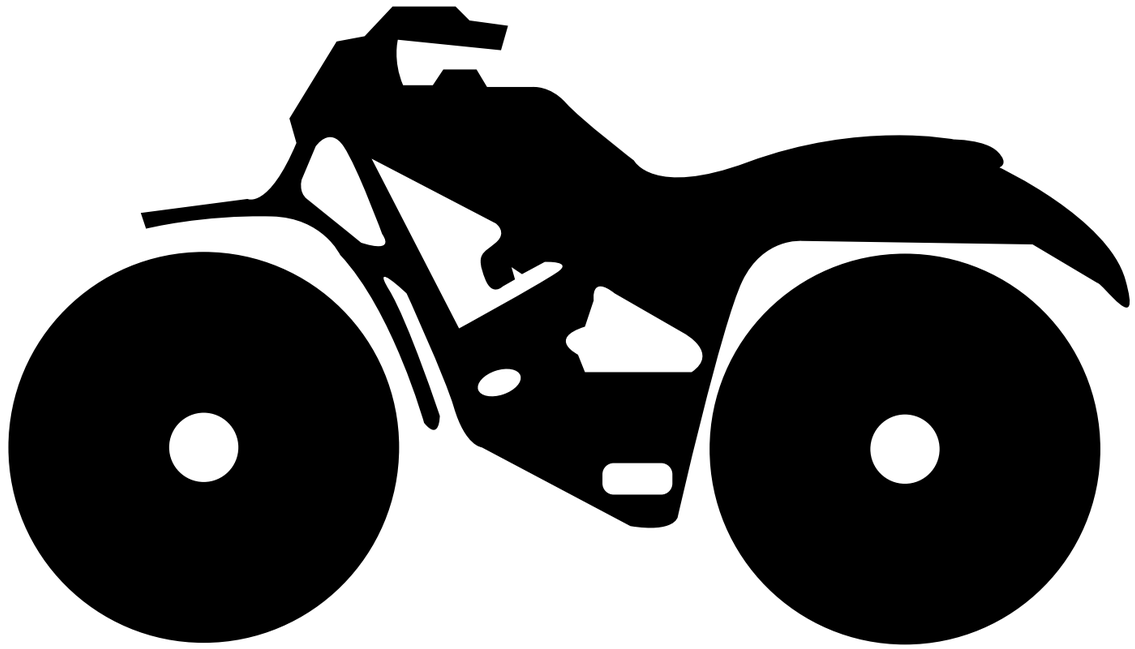

GEN INFO

1

CHAPTER 1.
GENERAL INFORMATION

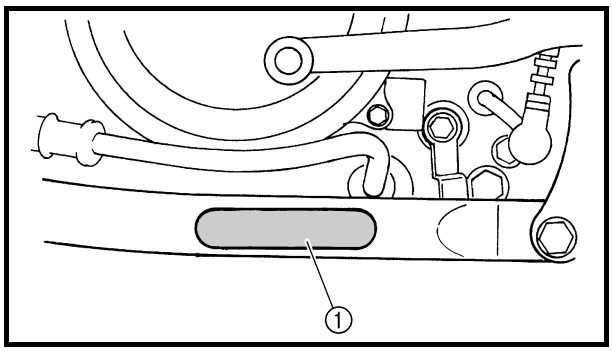

GENERAL INFORMATION

MACHINE IDENTIFICATION

VEHICLE IDENTIFICATION NUMBER

The vehicle identification number ① is stamped into the left side of the frame.

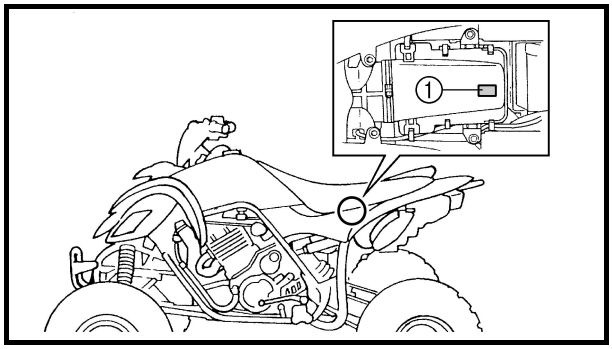

MODEL LABEL

The model label ① is affixed to the air filter case cover. This information will be needed to order spare parts.

EB101000

IMPORTANT INFORMATION

PREPARATION FOR REMOVAL PROCEDURES

1. Remove all dirt, mud, dust and foreign material before removal and disassembly.
2. Use proper tools and cleaning equipment. Refer to the “SPECIAL TOOLS” section.
3. When disassembling the machine, always keep mated parts together. This includes gears, cylinder, piston and other parts that have been “mated” through normal wear. Mated parts must always be reused or replaced as an assembly.
4. During machine disassembly, clean all parts and place them in trays in the order of disassembly. This will speed up assembly and allow for the correct installation of all parts.
5. Keep all parts away from any source of fire.

EB101010

REPLACEMENT PARTS

1. Use only genuine Yamaha parts for all replacements. Use oil and grease recommended by Yamaha for all lubrication jobs. Other brands may be similar in function and appearance, but inferior in quality.

EB101020

GASKETS, OIL SEALS AND O-RINGS

1. Replace all gaskets, seals and O-rings when overhauling the engine. All gasket surfaces, oil seal lips and O-rings must be cleaned.
2. Properly oil all mating parts and bearings during reassembly. Apply grease to the oil seal lips.

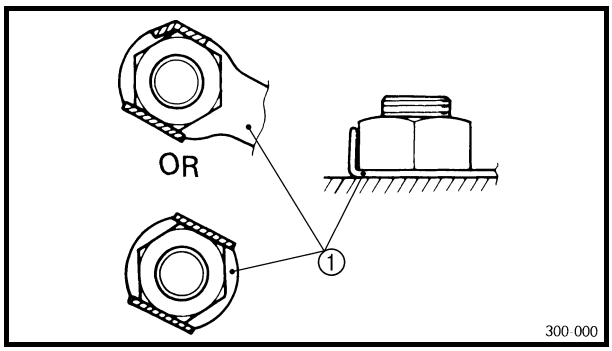

EB101030
LOCK WASHERS/PLATES AND COTTER PINS

1. Replace all lock washers/plates ① and cotter pins after removal. Bend lock tabs along the bolt or nut flats after the bolt or nut has been tightened to specification.

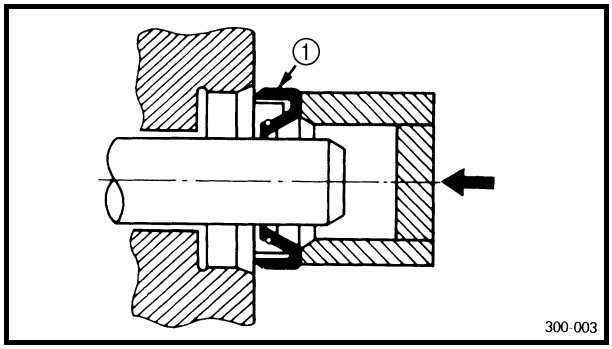

EB101040
BEARINGS AND OIL SEALS

1. Install bearings and oil seals so that the manufacturer's marks or numbers are visible. When installing oil seals, apply a light coating of lightweight lithium base grease to the seal lips. Oil bearings liberally when installing, if appropriate.

① Oil seal

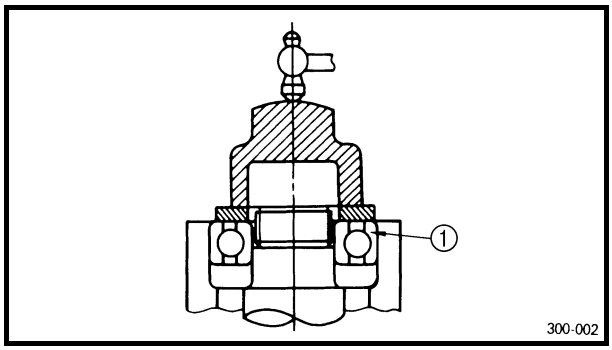

CAUTION:

Do not use compressed air to spin the bearings dry. This will damage the bearing surfaces.

① Bearing

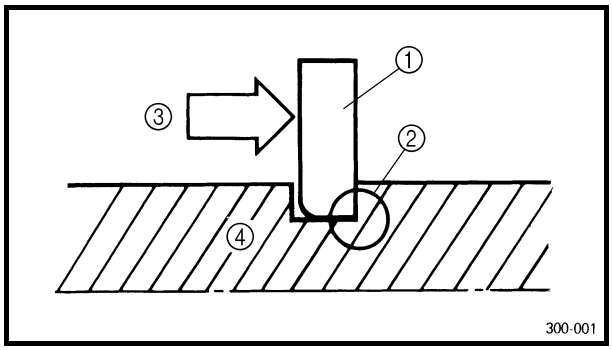

EB101050
CIRCLIPS

1. Check all circlips carefully before reassembly. Always replace piston pin clips after one use. Replace distorted circlips. When installing a circlip ①, make sure that the sharp-edged corner ② is positioned opposite the thrust ③ it receives. See sectional view.

④ Shaft

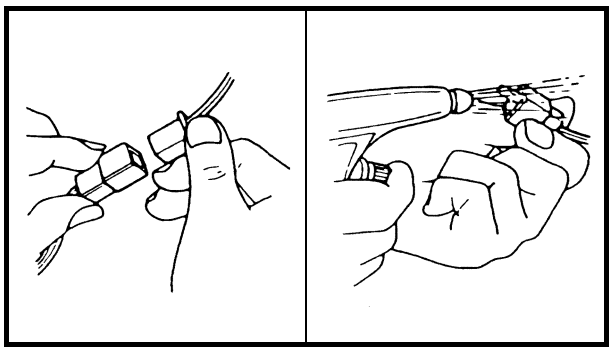

EB801000

CHECKING OF CONNECTIONS

Check the connectors for stains, rust, moisture, etc.

1.Disconnect:
- Connector

2.Check:
- Connector
  Moisture → Dry each terminal with an air blower.
  Stains/rust → Connect and disconnect the terminals several times.

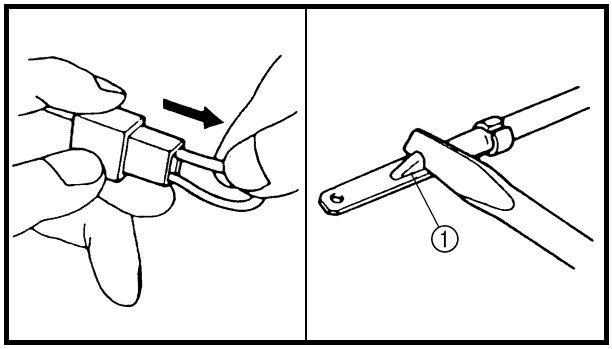

3.Check:
- Connector leads
  Looseness → Bend up the pin ① and connect the terminals.

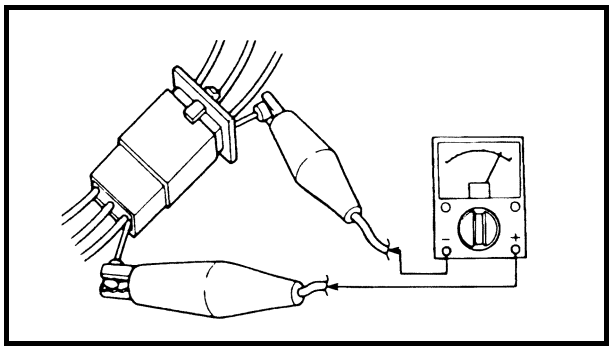

4.Connect:
- Connector terminals

NOTE:
The two terminals “click” together.

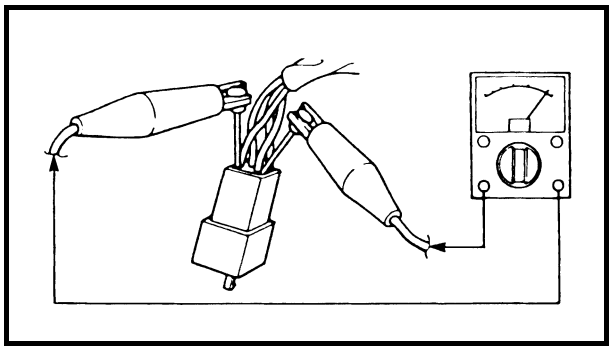

5.Check:
- Continuity (using a pocket tester)

NOTE:
- If there is no continuity, clean the terminals.
- When checking the wire harness be sure to perform steps 1 to 3.
- As a quick remedy, use a contact revitalizer available at most part stores.
- Check the connector with a pocket tester as shown.

EB102001

SPECIAL TOOLS

The following special tools are necessary for complete and accurate tune-up and assembly. Use only the appropriate special tools; this will help prevent damage caused by the use of inappropriate tools or improvised techniques. Special tools may differ by shape and part number from country to country. In such a case, two types are provided.
When placing an order, refer to the list provided below to avoid any mistakes.

For US and CDN
P/N. YM-, YU-, YS-, YK-, ACC-
Except for US and CDN
P/N. 90890-

Tool No.	Tool name/How to use	Illustration
Bolt 90890-01083 Weight 90890-01084 Set YU-01083-A	Slide hammer bolt (M6)/weight/set These tools are used to remove the rocker arm shaft.	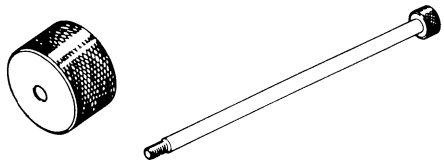
90890-01135 YU-01135-A	Crankcase separating tool This tool is used to separate the crankcase.	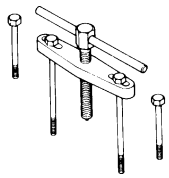
Pot 90890-01274 Bolt 90890-01275	Crankshaft installer pot Crankshaft installer bolt These tools are used to install the crankshaft.	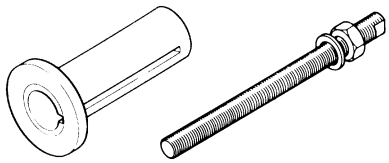
YU-90050	Crankshaft installer set These tools are used to install the crankshaft.	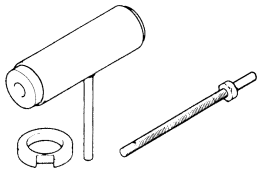
Adapter 90890-04059 YM-90069 Spacer 90890-04081 YM-91044	Adapter Spacer (crankshaft installer) These tools are used to install the crankshaft.	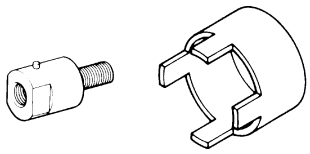
90890-01016	Spacer This tool is used to install the crankshaft.	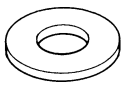

Tool No.	Tool name/How to use	Illustration
90890-01304 YU-01304	Piston pin puller This tool is used to remove the piston pin.	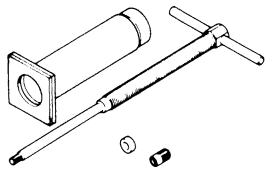
90890-01311 YM-08035	Tappet adjusting tool (3 mm) This tool is necessary for adjusting the valve clearance.	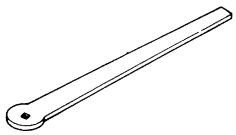 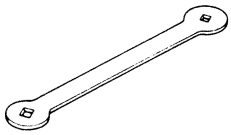
90890-01312 YM-01312-A	Fuel level gauge This gauge is used to measure the fuel level in the float chamber.	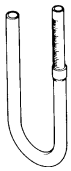
90890-01325 YU-24460-01	Radiator cap tester This tool is used to check the cooling system.	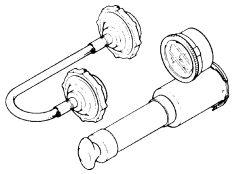
90890-01352 YU-33984	Adapter This tool is used to check the cooling system.	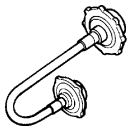
90890-01327 YM-01327	Damper rod holder (30 mm) This tool is needed to loosen and tighten the steering stem bearing retainer.	
90890-01362 YU-33270	Flywheel puller These tools are needed to remove the rotor.	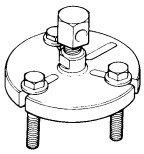 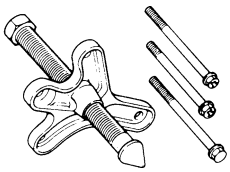
90890-01419 YM-37132	Axle nut wrench (50 mm) This tool is needed to loosen or tighten the rear axle nut.	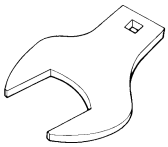 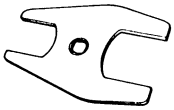

Tool No.	Tool name/How to use	Illustration
90890-01469 YM-01469	Oil filter wrench This tool is needed to loosen or tighten the oil filter cartridge.	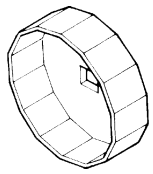
90890-01474 YM-01474	Ball joint remover/installer set These tools are used to removing or installing the ball joint.	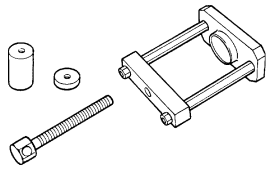
90890-01480 YM-01480	Ball joint remover/installer attachment set These tools are used to removing or installing the ball joint.	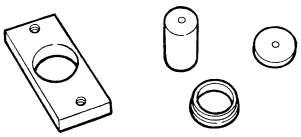
90890-01701 YS-01880	Sheave holder This tool is needed to hold the AC magneto rotor when removing or installing the AC magneto rotor bolts.	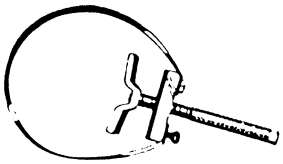
Set 90890-03081 YU-33223 Adapter 90890-04082 YU-33223-3	Compression gauge set Adapter These tools are needed to measure engine compression.	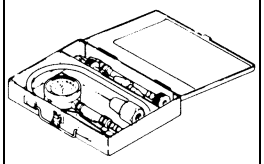 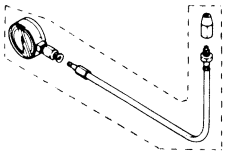
90890-03112 YU-03112	Pocket tester This instrument is needed for checking the electrical system.	
90890-03141 YM-33277-A	Timing light This tool is necessary for checking ignition timing.	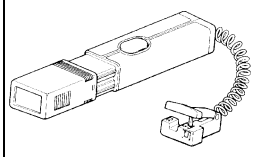 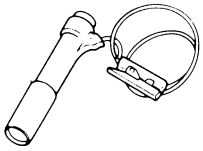
90890-03158	Carburetor angle driver This tool is used to turn the pilot screw when adjusting the engine idling speed.	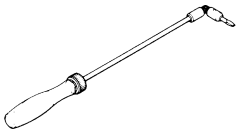

Tool No.	Tool name/How to use	Illustration
Compressor 90890-04019 YM-04019 Attachment 90890-01243	Valve spring compressor Valve spring compressor attachment This tool is needed to remove and install the valve assemblies.	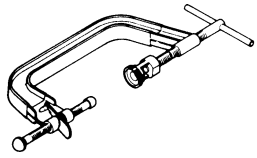
Middle driven shaft bearing driver 90890-04058 YM-04058-1 Mechanical seal installer 90890-04078 YM-33221	Middle driven shaft bearing driver Mechanical seal installer These tools are used to install the water pump seal.	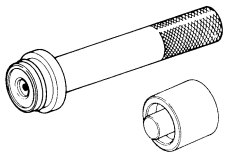
90890-04064 YM-4064-A	Valve guide remover (ø 6) This tool is needed to remove and install the valve guide.	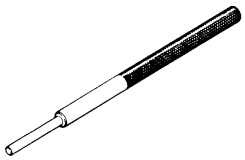
90890-04065 YM-04065-A	Valve guide installer (ø 6) This tool is needed to install the valve guide.	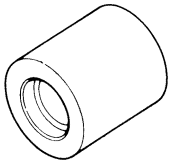
90890-04066 YM-04066	Valve guide reamer (ø 6) This tool is needed to rebore the new valve guide.	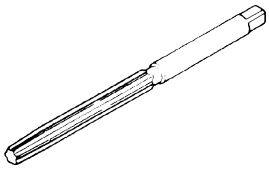
90890-04086 YM-91042	Clutch holding tool This tool is needed to hold the clutch carrier when removing or installing the carrier nut.	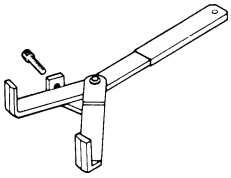 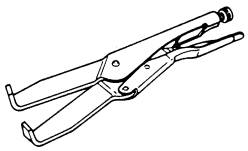
90890-06754	Ignition checker This instrument is necessary for checking the ignition system components.	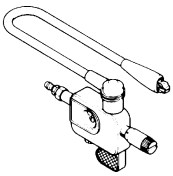
YM-34487	Dynamic spark tester This instrument is necessary for checking the ignition system components.	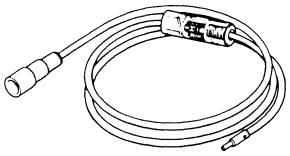

Tool No.	Tool name/How to use	Illustration
Bond 90890-85505 Sealant ACC-11001-05-01	Yamaha bond No. 1215 Sealant (Quick Gasket®) This sealant (bond) is used on crankcase mating surfaces, etc.	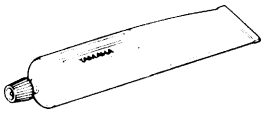

SPEC 2

CHAPTER 2.
SPECIFICATIONS

SPECIFICATIONS

GENERAL SPECIFICATIONS

Item	Standard
Model code:	5LP2 : (For CDN) 5LP4 : (For Europe)
Dimensions:	
Overall length	1,830 mm (72.0 in)
Overall width	1,100 mm (43.3 in)
Overall height	1,150 mm (45.3 in)
Seat height	860 mm (33.9 in)
Wheelbase	1,245 mm (49.0 in)
Minimum ground clearance	265 mm (10.4 in)
Minimum turning radius	3,300 mm (129.9 in)
Basic weight:	
With oil and full fuel tank	193 kg (426 lb)
Engine:	
Engine type	Liquid-cooled 4-stroke, SOHC
Cylinder arrangement	Forward-inclined single cylinder
Displacement	660 cm^3
Bore × stroke	100.0 × 84.0 mm (3.94 × 3.31 in)
Compression ratio	9.2 : 1
Standard compression pressure (at sea level)	1,250 kPa (12.5 kg/cm^2, 181 psi)
Starting system	Electric starter
Lubrication system:	Dry sump
Oil type or grade: Engine oil For CDN 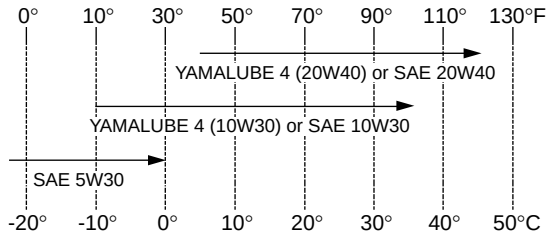 For Europe 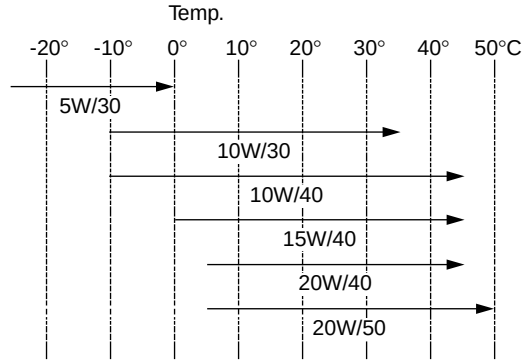 	API service SE, SF, SG type or higher

Item	Standard
Oil capacity:	
Engine oil	
Periodic oil change	1.9 L (1.67 lmp qt, 2.01 US qt)
With oil filter replacement	1.95 L (1.72 lmp qt, 2.06 US qt)
Total amount	2.3 L (2.02 lmp qt, 2.43 US qt)
Radiator capacity (including all routes)	1.3 L (1.14 lmp qt, 1.37 US qt)
Air filter:	Wet type element
Fuel:	
Type	Regular unleaded fuel
Fuel tank capacity	12 L (2.64 lmp gal, 3.17 US gal)
Fuel reserve amount	2.6 L (0.57 lmp gal, 0.69 US gal)
Carburetor:	
Type/quantity	BSR33/2
Manufacturer	MIKUNI
Spark plug:	
Type/manufacturer	DPR8EA-9/NGK
Spark plug gap	0.8 ~ 0.9 mm (0.031 ~ 0.035 in)
Clutch type:	Wet, multiple disc
Transmission:	
Primary reduction system	Spur gear
Primary reduction ratio	71/34 (2.088)
Secondary reduction system	Chain drive
Secondary reduction ratio	40/13 (3.076)
Transmission type	Constant mesh, 5-speed/forward. 1-speed/reverse
Operation	Left foot operation
Gear ratio	
1st gear	34/14 (2.428)
2nd gear	29/19 (1.526)
3rd gear	26/21 (1.238)
4th gear	22/21 (1.047)
5th gear	19/21 (0.904)
Reverse gear	28/23 × 23 × 16 (1.750)
Chassis:	
Frame type	Steel tube frame
Caster angle	8°
Camber angle	–1°
Kingpin angle	14.5°
Kingpin offset	5 mm (0.20 in)
Trail	47 mm (1.85 in)
Tread (STD) front	925 mm (36.42 in)
rear	840 mm (33.07 in)
Toe-in	0 ~ 10 mm (0 ~ 0.39 in)

Item		Standard
Tire:		
Type		Tubeless
Size	front	AT21 × 7–10
	rear	AT20 × 10–9
Manufacturer	front	DUNLOP
	rear	DUNLOP
Type	front	KT331 Radial
	rear	KT335 Radial
Tire pressure (cold tire):		
Maximum load*		100 kg (220 lb)
Off-road riding	front	27.5 kPa (0.275 kg/cm^2, 4.0 psi)
	rear	27.5 kPa (0.275 kg/cm^2, 4.0 psi)
*Load in total weight of cargo, rider and accessories		
Brake:		
Front brake	type	Dual disc brake
	operation	Right hand operation
Rear brake	type	Single disc brake
	operation	Right foot operation
Suspension:		
Front suspension		Double wishbone
Rear suspension		Swingarm (link suspension)
Shock absorber:		
Front shock absorber		Coil spring/oil damper
Rear shock absorber		Coil spring/gas-oil damper
Wheel travel:		
Front wheel travel		230 mm (9.06 in)
Rear wheel travel		220 mm (8.66 in)
Electrical:		
Ignition system		DC-C.D.I.
Generator system		A.C. magneto
Battery type		YTX14-BS
Battery capacity		12 V 12 Ah
Headlight type:		Krypton bulb
Bulb voltage/wattage × quantity:		
Headlight		12 V 30 W/30 W × 2
Tail/brake light		12 V 5 W/21 W × 1
Indicator and warning lights		
Neutral		12 V 1.7 W × 1
Reverse		12 V 1.7 W × 1
Coolant temperature		12 V 1.7 W × 1

MAINTENANCE SPECIFICATIONS

ENGINE

Item	Standard	Limit
Cylinder head:		
Warp limit 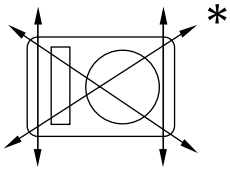	----	0.05 mm (0.002 in)
Cylinder:		
Bore size	100.005 ~ 100.045 mm (3.9372 ~ 3.9388 in)	100.1 mm (3.94 in)
Measuring point ✻ 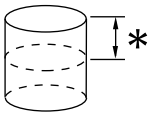	50 mm (2.0 in)	----
Camshaft:		
Drive method	Chain drive (Left)	----
Camshaft cap inside diameter	23.000 ~ 23.021 mm (0.9055 ~ 0.9063 in)	----
Camshaft journal diameter	22.967 ~ 22.980 mm (0.9042 ~ 0.9047 in)	----
Camshaft journal-to-camshaft cap clearance	0.020 ~ 0.054 mm (0.0008 ~ 0.0021 in)	----
Cam dimensions 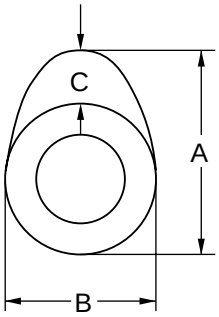		
Intake “A”	35.69 ~ 35.79 mm (1.4051 ~ 1.4091 in)	35.59 mm (1.4012 in)
“B”	30.15 ~ 30.25 mm (1.1870 ~ 1.1909 in)	30.05 mm (1.1831 in)
“C”	5.74 mm (0.2260 in)	----
Exhaust “A”	36.50 ~ 36.60 mm (1.437 ~ 1.441 in)	36.40 mm (1.4331 in)
“B”	30.15 ~ 30.25 mm (1.187 ~ 1.191 in)	30.05 mm (1.1831 in)
“C”	6.55 mm (0.2579 in)	----

Item		Standard	Limit
Camshaft runout limit 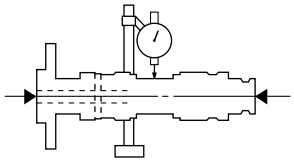		----	0.03 mm (0.0012 in)
Timing chain:			
Timing chain type/No. of links		75-RH2015/126	----
Timing chain adjustment method		Automatic	----
Rocker arm/rocker arm shaft:			
Shaft outside diameter		11.976 ~ 11.991 mm (0.4715 ~ 0.4721 in)	----
Arm-to-shaft clearance		0.009 ~ 0.042 mm (0.0004 ~ 0.0017 in)	----
Valve, valve seat, valve guide:			
Valve clearance (cold)	IN	0.10 ~ 0.15 mm (0.0039 ~ 0.0059 in)	----
	EX	0.15 ~ 0.20 mm (0.0059 ~ 0.0079 in)	----
Valve dimensions			
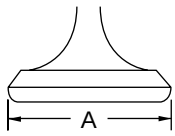 Head Diameter	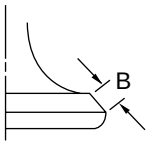 Face Width	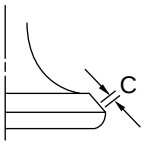 Seat Width	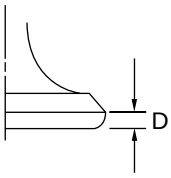 Margin Thickness
"A" head diameter	IN	29.9 ~ 30.1 mm (1.1772 ~ 1.1850 in)	----
	EX	31.9 ~ 32.1 mm (1.2559 ~ 1.2638 in)	----
"B" face width	IN	2.25 mm (0.0886 in)	----
	EX	2.26 mm (0.0890 in)	----
"C" seat width	IN	0.9 ~ 1.1 mm (0.0354 ~ 0.0433 in)	1.6 mm (0.0630 in)
	EX	0.9 ~ 1.1 mm (0.0354 ~ 0.0433 in)	1.6 mm (0.0630 in)
"D" margin thickness	IN	0.85 ~ 1.15 mm (0.0335 ~ 0.0453 in)	----
	EX	0.85 ~ 1.15 mm (0.0335 ~ 0.0453 in)	----
Stem outside diameter	IN	5.975 ~ 5.990 mm (0.2352 ~ 0.2358 in)	5.945 mm (0.2341 in)
	EX	5.960 ~ 5.975 mm (0.2346 ~ 0.2352 in)	5.930 mm (0.2335 in)
Guide inside diameter	IN	6.000 ~ 6.012 mm (0.2362 ~ 0.2367 in)	6.040 mm (0.2378 in)
	EX	6.000 ~ 6.012 mm (0.2362 ~ 0.2367 in)	6.040 mm (0.2378 in)

Item		Standard	Limit
Stem-to-guide clearance	IN	0.010 ~ 0.037 mm (0.0004 ~ 0.0015 in)	0.08 mm (0.0031 in)
	EX	0.025 ~ 0.052 mm (0.0010 ~ 0.0020 in)	0.10 mm (0.0039 in)
Stem runout limit		----	0.01 mm (0.0004 in)
Valve seat width	IN	0.9 ~ 1.1 mm (0.0354 ~ 0.0433 in)	1.6 mm (0.0630 in)
	EX	0.9 ~ 1.1 mm (0.0354 ~ 0.0433 in)	1.6 mm (0.0630 in)
Valve spring:			
Free length	IN	35.95 mm (1.42 in)	34.15 mm (1.34 in)
	EX	37.75 mm (1.49 in)	35.86 mm (1.41 in)
Set length (valve closed)	IN	27.2 mm (1.07 in)	----
	EX	30.7 mm (1.21 in)	----
Compressed pressure (installed)	IN	149 ~ 173 N (15.19 ~ 17.64 kg, 33.50 ~ 38.89 lb)	----
	EX	165 ~ 191 N (16.83 ~ 19.49 kg, 37.09 ~ 42.94 lb)	----
Tilt limit *	IN	----	2.5°/1.6 mm (2.5°/0.06 in)
	EX	----	2.5°/1.6 mm (2.5°/0.06 in)
Direction of winding (top view)	IN	Clockwise	----
	EX	Clockwise	----

Item	Standard	Limit
Piston:		
Piston to cylinder clearance	0.05 ~ 0.07 mm (0.0020 ~ 0.0028 in)	0.15 mm (0.0059 in)
Piston size “D”	99.945 ~ 99.995 mm (3.9348 ~ 3.9368 in)	----
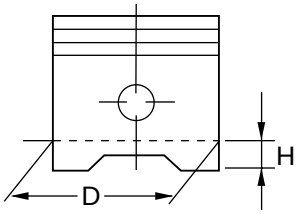		
Measuring point “H”	2.5 mm (0.10 in)	----
Piston off-set	1.0 mm (0.04 in)	----
Piston pin bore inside diameter	22.004 ~ 22.015 mm (0.8663 ~ 0.8667 in)	22.045 mm (0.8679 in)
Piston pin outside diameter	21.991 ~ 22.000 mm (0.8658 ~ 0.8661 in)	21.971 mm (0.8650 in)
Piston rings:		
Top ring		
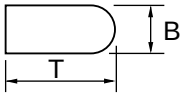		
Type	Barrel	----
Dimensions (B × T)	1.2 × 3.8 mm (0.0472 × 0.1496 in)	----
End gap (installed)	0.30 ~ 0.45 mm (0.0118 ~ 0.0177 in)	0.70 mm (0.0276 in)
Side clearance (installed)	0.04 ~ 0.08 mm (0.0016 ~ 0.0031 in)	0.13 mm (0.0051 in)
2nd ring		
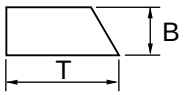		
Type	Taper	----
Dimensions (B × T)	1.2 × 4.0 mm (0.0472 × 0.1575 in)	----
End gap (installed)	0.30 ~ 0.45 mm (0.0118 ~ 0.0177 in)	0.80 mm (0.0315 in)
Side clearance	0.03 ~ 0.07 mm (0.0012 ~ 0.0028 in)	0.13 mm (0.0051 in)
Oil ring		
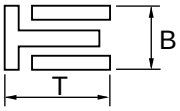		
Dimensions (B × T)	2.5 × 3.4 mm (0.0984 × 0.1339 in)	----
End gap (installed)	0.2 ~ 0.7 mm (0.0079 ~ 0.0276 in)	----

Item	Standard	Limit
Crankshaft:		
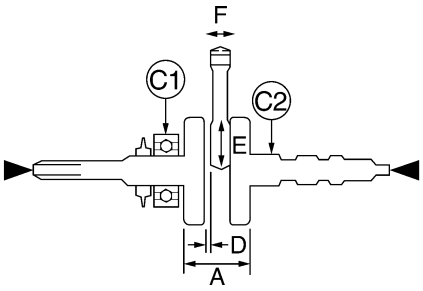		
Crank width “A”	74.95 ~ 75.00 mm (2.9508 ~ 2.9528 in)	----
Runout limit C1	----	0.03 mm (0.0012 in)
C2	----	0.03 mm (0.0012 in)
Big end side clearance “D”	0.32 ~ 0.64 mm (0.0126 ~ 0.0252 in)	1.0 mm (0.0394 in)
Big end radial clearance “E”	0.010 ~ 0.025 mm (0.0004 ~ 0.0010 in)	----
Small end free play “F”	0.8 mm (0.0315 in)	----
Balancer:		
Balancer drive method	Gear	----
Clutch:		
Friction plate 1		
Thickness	2.74 ~ 2.86 mm (0.108 ~ 0.113 in)	2.6 mm (0.102 in)
Quantity	6	----
Friction plate 2		
Thickness	2.94 ~ 3.06 mm (0.116 ~ 0.120 in)	2.8 mm (0.110 in)
Quantity	2	----
Clutch plate		
Thickness	1.1 ~ 1.3 mm (0.043 ~ 0.051 in)	----
Quantity	7	----
Max. warpage	----	0.2 mm (0.008 in)
Clutch spring		
Free length	42.8 mm (1.69 in)	40.7 mm (1.60 in)
Quantity	5	----
Min. length	----	40.8 mm (1.61 in)
Clutch release method	Outer pull, rack and pinion pull	----

Item		Standard	Limit
Transmission:			
Main axle deflection limit		----	0.08 mm (0.0031 in)
Drive axle deflection limit		----	0.08 mm (0.0031 in)
Shifter:			
Shifter type		Shift drum and guide bar	----
Decompression device:			
Device type		Auto decomp	----
Air filter oil grade:		Engine oil	----
Carburetors:			
I. D. mark		5LP1 00	----
Main jet	(M.J)	Carburetor #1 : #140 Carburetor #2 : #145	----
Main air jet	(M.A.J)	#130	----
Jet needle	(J.N)	5ND16-56-3	----
Needle jet	(N.J)	P-6M (#826)	----
Pilot air jet	(P.A.J.1)	Carburetor #1 : #80 Carburetor #2 : #150	----
Pilot air jet	(P.A.J.2)	1.3	----
Pilot outlet	(P.O)	Carburetor #1 : 1.0 Carburetor #2 : 0.9	----
Pilot jet	(P.J)	#22.5	----
Bypass 1	(B.P.1)	0.8	----
Bypass 2	(B.P.2)	0.8	----
Pilot screw turns out		Carburetor #1: 2-1/2 Carburetor #2: 1-1/2	----
Valve seat size	(V.S)	2.0	----
Starter jet	(G.S.1)	#95	----
Starter jet	(G.S.2)	0.5	----
Throttle valve size	(Th.V)	#80	----
Float height	(F.H)	13 mm (0.51 in)	----
Fuel level	(F.L)	3 ~ 4 mm (0.12 ~ 0.16 in)	----
Engine idle speed		1,450 ~ 1,550 r/min	----
Intake vacuum		32.0 ~ 33.3 kPa (240 ~ 250 mmHg, 9.45 ~ 9.83 inHg)	----
Oil pump:			
Oil filter type		Paper	----
Oil pump type		Trochoid	----
Tip clearance “A” or “B”		0.12 mm (0.005 in)	0.2 mm (0.008 in)
Side clearance		0.03 ~ 0.08 mm (0.001 ~ 0.003 in)	----
Bypass valve setting pressure		80 ~ 120 kPa (0.8 ~ 1.2 kg/cm^2, 11.6 ~ 17.4 psi)	----
Oil pressure (hot)		65 kPa (0.65 kg/cm^2, 9.4 psi) at 1,500 r/min	----
Pressure check location		Cylinder head	----

Item	Standard	Limit
Cooling system:		
Radiator core		
Width	219 mm (8.62 in)	----
Height	300 mm (11.8 in)	----
Depth	16 mm (0.63 in)	----
Radiator cap opening pressure	95 ~ 125 kPa (0.95 ~ 1.25 kg/cm^2, 13.8 ~ 18.1 psi)	----
Radiator capacity	0.55 L (0.48 Imp qt, 0.58 US qt)	----
Coolant reservoir		
Capacity	0.29 L (0.26 Imp qt, 0.31 US qt)	----
From low to full level	0.165 L (0.15 Imp qt, 0.17 US qt)	----
Water pump:		
Type	Single suction centrifugal pump	----
Reduction ratio	33/34 (0.971)	

Lubrication chart:

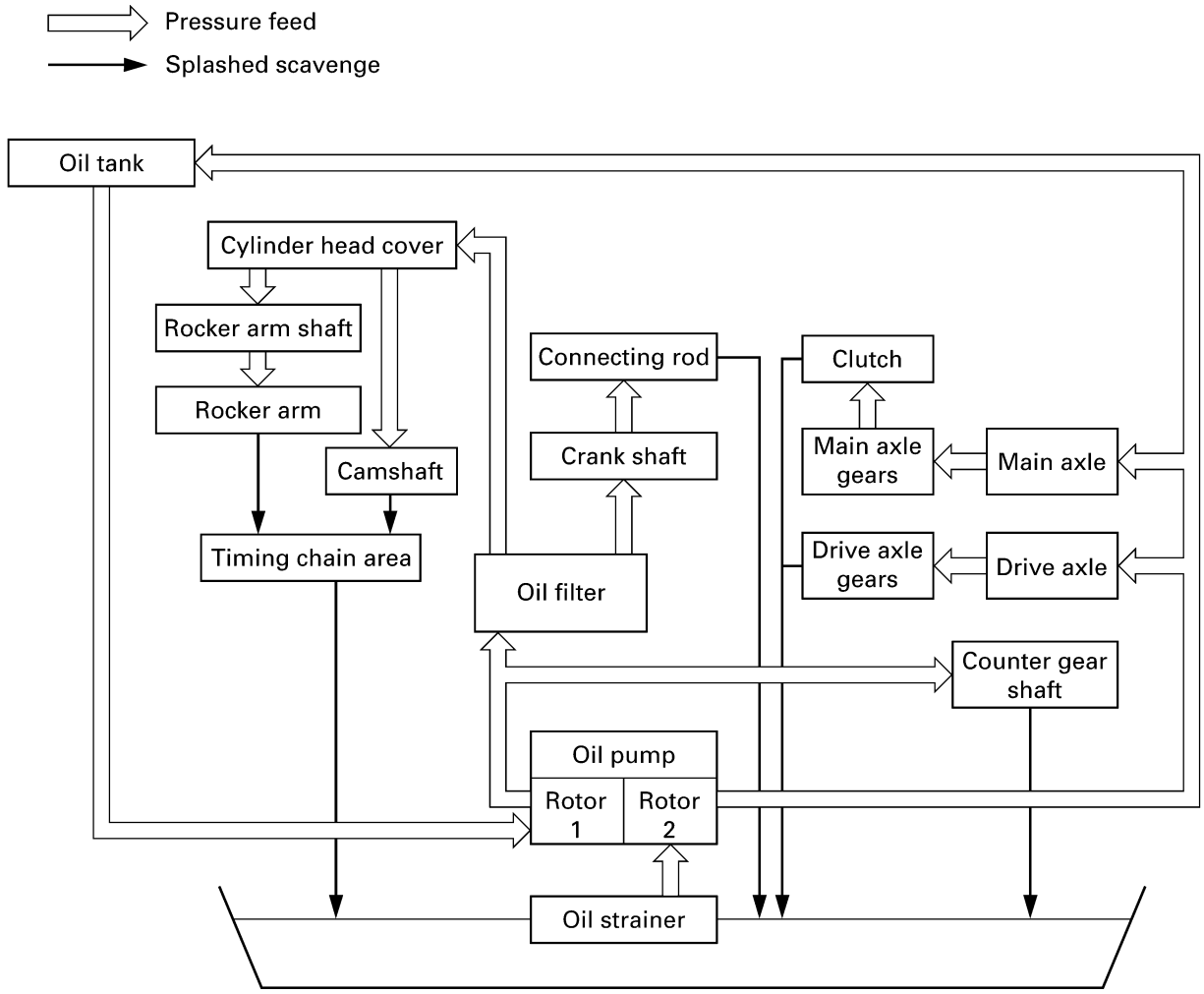

Item	Standard	Limit
Cylinder head tightening sequence:		

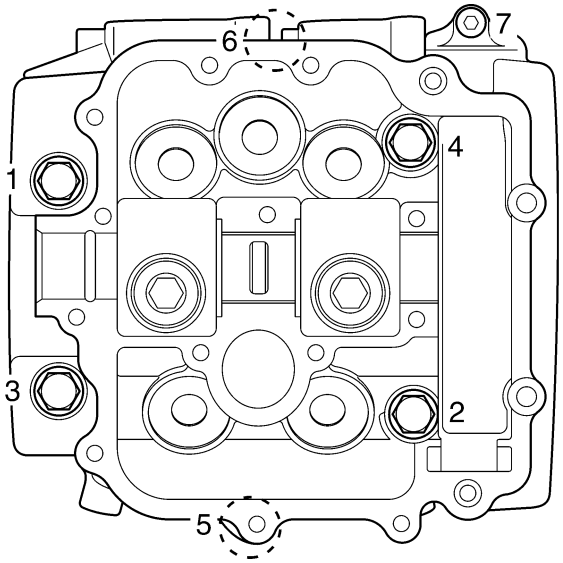

Tightening torques

Part to be tightened	Part name	Thread size	Q'ty	Tightening torque			Remarks
				Nm	m·kg	ft·lb	
Cylinder head (exhaust pipe)	Stud bolt	M6	4	7	0.7	5.1	
Cylinder head	Bolt	M9	4	38	3.8	27	
	Bolt	M9	2	38	3.8	27	
	Bolt	M6	1	10	1.0	7.2	
Spark plug	—	M12	1	18	1.8	13	
Cylinder head cover	Bolt	M6	17	10	1.0	7.2	
Camshaft end cap	Bolt	M6	1	10	1.0	7.2	
Oil check bolt	—	M6	1	7	0.7	5.1	
Tappet cover (exhaust)	—	M32	2	12	1.2	8.7	
Tappet cover (intake)	Bolt	M6	4	10	1.0	7.2	
Cylinder	Bolt	M10	2	42	4.2	30	
	Bolt	M10	2	42	4.2	30	
	Bolt	M6	2	10	1.0	7.2	
Timing chain tensioner	Bolt	M6	2	10	1.0	7.2	
Timing chain tensioner cap	Bolt	M16	1	22	2.2	16	
Timing chain guide (intake)	Bolt	M6	2	8	0.8	5.8	
Camshaft sprocket	Bolt	M7	2	20	2.0	14	
Rocker arm shaft	Bolt	M6	2	10	1.0	7.2	
Valve adjusting screw	Nut	M6	5	14	1.4	10	
Radiator	Bolt	M6	2	7	0.7	5.1	
Coolant drain bolt	—	M6	1	10	1.0	7.2	
Engine oil drain bolt (oil tank)	—	M10	1	25	2.5	18	
Engine oil drain bolt (engine)	—	M14	1	30	3.0	22	
Oil filter bolt	Union bolt	M20	1	63	6.3	45	E
Oil filter cartridge	—	M20	1	17	1.7	12	
Oil delivery pipe 1	Union bolt	M10	2	20	2.0	14	
Oil delivery pipe 2	Union bolt	M8	2	18	1.8	13	
Oil pipe joint	—	M14	1	50	5.0	36	
Oil pipe 1 and oil pipe joint	Nut	M16	1	35	3.5	25	
Oil pipe 2 and oil tank	Nut	M16	1	35	3.5	25	
Air filter case	Bolt	M6	2	7	0.7	5.1	
Carburetor clamp	Bolt	M4	4	5	0.5	3.6	
Exhaust pipe 1 and exhaust pipe 2	Bolt	M8	1	16	1.6	12	
Exhaust pipe protector	Bolt	M6	4	10	1.0	7.2	G
Spark arrester	Bolt	M6	1	8	0.8	5.8	
Muffler and exhaust pipe 2	Bolt	M8	1	20	2.0	14	
Muffler	Bolt	M8	2	26	2.6	19	
Silencer cap	Bolt	M6	3	10	1.0	7.2	G
Exhaust pipe	Nut	M6	4	10	1.0	7.2	

Part to be tightened	Part name	Thread size	Q'ty	Tightening torque			Remarks
				Nm	m·kg	ft·lb	
Bearing retainer	Screw	M6	4	7	0.7	5.1	
AC magneto rotor	Nut	M14	1	150	15.0	110	
Starter clutch	Bolt	M6	6	16	1.6	11	
Balancer driven gear	Nut	M18	1	140	14.0	100	Use a lock washer.
Primary drive gear	Nut	M20	1	150	15.0	110	Use a lock washer.
Clutch spring	Bolt	M6	5	8	0.8	5.8	
Clutch boss	Nut	M20	1	90	9.0	65	Use a lock washer.
Pull lever shaft	Bolt	M6	1	7	0.7	5.1	
Drive sprocket	Nut	M18	1	70	7.0	50	Use a lock washer.
Oil seal retainer	Bolt	M6	2	10	1.0	7.2	
Shift drum segment	Bolt	M8	1	30	3.0	22	
Shift guide	Bolt	M6	2	10	1.0	7.2	
Stopper lever	Bolt	M6	1	10	1.0	7.2	
Reverse shift lever	Bolt	M6	1	13	1.3	9.4	
Shift arm	Bolt	M6	1	10	1.0	7.2	
Shift pedal adjusting rod	Nut	M6	1	8	0.8	5.8	Left-hand threads
	Nut	M6	1	8	0.8	5.8	
Stator assembly	Bolt	M5	3	7	0.7	5.1	
Pick up coil	Bolt	M5	2	7	0.7	5.1	
AC magneto lead holder	Bolt	M6	2	10	1.0	7.2	
Ignition coil	Bolt	M6	2	7	0.7	5.1	
Starter motor	Bolt	M6	2	10	1.0	7.2	
Neutral switch	—	M10	1	20	2.0	14	
Reverse switch	—	M10	1	20	2.0	14	
Thermo switch 1	—	M18	1	28	2.8	20	
Thermo switch 2	—	M18	1	28	2.8	20	

CHASSIS

Item		Standard	Limit
Steering system:			
Steering bearing type		Ball and race bearing	----
Front suspension:			
Shock absorber travel		110 mm (4.33 in)	----
Fork spring free length		316.5 mm (12.46 in)	----
Spring fitting length		293.5 mm (11.56 in)	----
Spring rate	(K1)	19.6 N/mm (2.00 kg/mm, 111.92 lb/in)	----
Spring rate	(K2)	29.4 N/mm (3.00 kg/mm, 167.87 lb/in)	----
Optional spring		No	----
Rear suspension:			
Shock absorber travel		100 mm (3.94 in)	----
Spring free length		273 mm (10.75 in)	----
Spring fitting length		253 mm (9.96 in)	----
Spring rate	(K1)	55 N/mm (5.61 kg/mm, 314.05 lb/in)	----
Stroke	(K1)	0 ~ 100 mm (0 ~ 3.94 in)	----
Optional spring		No	----
Swingarm:			
Free play limit	end	----	1 mm (0.04 in)
	side	----	1 mm (0.04 in)
Front wheel:			
Type		Panel wheel	----
Rim size		10 × 5.5 AT	----
Rim material		Aluminum	----
Rim runout limit	radial	----	2 mm (0.08 in)
	lateral	----	2 mm (0.08 in)
Rear wheel:			
Type		Panel wheel	----
Rim size		9 × 8.5 AT	----
Rim material		Aluminum	----
Rim runout limit	radial	----	2 mm (0.08 in)
	lateral	----	2 mm (0.08 in)

Item		Standard	Limit
Front disc brake:			
Type		Dual	----
Disc outside diameter × thickness		161.0 × 3.5 mm (6.34 × 0.14 in)	----
Pad thickness	inner	4.2 mm (0.17 in)	1 mm (0.04 in)
Pad thickness	outer	4.2 mm (0.17 in)	1 mm (0.04 in)
Master cylinder inside diameter		12.7 mm (0.50 in)	----
Caliper cylinder inside diameter		32.03 mm (1.26 in)	----
Brake fluid type		DOT 4	----
Rear disc brake:			
Type		Single	----
Disc outside diameter × thickness		220.0 × 3.6 mm (8.66 × 0.14 in)	----
Pad thickness	inner	4.5 mm (0.18 in)	1 mm (0.04 in)
Pad thickness	outer	4.5 mm (0.18 in)	1 mm (0.04 in)
Master cylinder inside diameter		12.7 mm (0.50 in)	----
Caliper cylinder inside diameter		33.96 mm (1.34 in)	----
Brake fluid type		DOT 4	----
Brake lever and brake pedal:			
Brake lever free play (at lever end)		0 mm (0 in)	----
Brake pedal position		4 mm (0.16 in) (Below the top of footrest)	----
Throttle lever free play		3 ~ 5 mm (0.12 ~ 0.20 in)	----

Tightening torques

Part to be tightened	Thread size	Tightening torque			Remarks
		Nm	m·kg	ft·lb	
Engine bracket (upper) and frame	M8	33	3.3	24	
Engine bracket (upper) and engine	M10	40	4.0	29	
Engine bracket (lower) and frame	M10	56	5.6	40	
Engine bracket (lower) and engine	M10	56	5.6	40	
Engine bracket (middle and lower) and engine	M10	56	5.6	40	
Swingarm pivot shaft, engine and frame	M16	95	9.5	68	
Rear shock absorber and frame	M10	32	3.2	23	
Relay arm and swingarm	M10	32	3.2	23	
Connecting arm and frame	M10	32	3.2	23	
Relay arm and rear shock absorber	M10	32	3.2	23	
Relay arm and connecting arm	M10	32	3.2	23	
Drive chain guide and swingarm	M6	7	0.7	5.1	
Hub, brake caliper bracket and swingarm	M12	90	9.0	65	
Drive chain adjusting bolt and locknut	M8	16	1.6	11	
Front shock absorber and frame	M10	45	4.5	32	
Front shock absorber and front arm (lower)	M10	45	4.5	32	
Front arm (upper) and frame	M10	38	3.8	27	
Front arm (lower) and frame	M10	32	3.2	23	
Brake hose holder and front arm (upper)	M6	7	0.7	5.1	
Steering stem, pitman arm and frame	M14	110	11	80	
Steering stem bushing and frame	M8	23	2.3	17	Use a lock washer.
Steering stem and handlebar holder	M8	23	2.3	17	
Tie-rod end and locknut	M10	15	1.5	11	
Steering knuckle and front wheel hub	M14	70	7.0	50	
Steering knuckle and front arm (upper and lower)	M10	25	2.5	18	
Steering knuckle and tie-rod ball joint	M10	25	2.5	18	
Pitman arm and tie-rod ball joint	M10	25	2.5	18	
Frame and bearing retainer	M42	40	4.0	29	
Fuel tank and fuel cock	M6	4	0.4	2.9	
Fuel tank and frame	M6	7	0.7	5.1	
Front wheel and front wheel hub	M10	45	4.5	32	
Steering knuckle and front brake caliper	M8	28	2.8	20	
Front brake disc and front wheel hub	M8	28	2.8	20	
Rear axle and rear wheel hub	M14	120	12	85	
Rear brake caliper and brake caliper bracket	M8	28	2.8	20	
Rear wheel and rear wheel hub	M10	45	4.5	32	
Driven sprocket and sprocket bracket	M8	24	2.4	17	
Front brake pipe nut	M10	19	1.9	13	
Front brake master cylinder and handlebar	M6	7	0.7	5.1	

Part to be tightened	Thread size	Tightening torque			Remarks
		Nm	m·kg	ft·lb	
Front brake master cylinder and brake lever	M6	6	0.6	4.3	
Front brake master cylinder and brake hose	M10	27	2.7	19	
Brake hose joint and frame	M6	10	1.0	7.2	
Bleed screw	M8	6	0.6	4.3	
Front brake pad holding bolt	M10	18	1.8	13	
Front brake caliper and brake hose	M10	27	2.7	19	
Front brake caliper retaining bolt	M8	23	2.3	17	
Rear axle ring nut	M38	SEE NOTE			
Rear brake pad holding bolt	M10	18	1.8	13	Use a lock washer.
Rear brake caliper and brake hose	M10	30	3.0	22	
Rear brake master cylinder and frame	M8	20	2.0	14	
Rear brake master cylinder and brake hose	M10	30	3.0	22	
Parking brake adjusting bolt and locknut	M8	16	1.6	11	
Rear brake disc and brake disc bracket	M8	28	2.8	20	
Rear brake fluid reservoir cover and bracket	M6	4	0.4	2.9	
Rear brake fluid reservoir and bracket	M6	4	0.4	2.9	
Brake hose holder and swingarm	M6	7	0.7	5.1	
Front bumper and frame	M8	31	3.1	22	
Front fender bracket and frame	M8	16	1.6	11	
Rear carrier bar and frame	M8	23	2.3	17	
Footrest and frame	M10	65	6.5	48	
Footrest guard bracket and frame	M8	33	3.3	24	
Footrest and footrest guard bracket	M8	16	1.6	11	
Footrest guard bracket and rear fender	M6	7	0.7	5.1	
Battery holding bracket and frame	M6	7	0.7	5.1	
Air filter case and frame	M6	7	0.7	5.1	
Carburetor clamp screw	M4	5	0.5	3.6	
Tail/brake light bracket and frame	M6	7	0.7	5.1	
Tail/brake light bracket and tail/brake light	M6	7	0.7	5.1	
Swingarm skid plate and swingarm	M6	7	0.7	5.1	
Swingarm skid plate and swingarm	M8	16	1.6	11	
Drive chain tensioner and frame	M8	32	3.2	23	
Engine skid plate and frame	M6	7	0.7	5.1	
Main frame and rear frame	M10	53	5.3	38	

NOTE:

Apply locking agent (LOCTITE®) to ring nuts threads.

1st: Tighten the inside ring nut 55 Nm (5.5 m • kg, 40 ft • lb).

2nd: Tighten the outside ring nut while holding the inside ring nut 190 Nm (19 m • kg, 140 ft • lb).

3rd: Loosen the inside ring nut while holding the outside ring nut 240 Nm (24 m • kg, 170 ft • lb).

ELECTRICAL

Item	Standard	Limit
Voltage:	12 V	----
Ignition system:		
Ignition timing (B.T.D.C.)	12°/ 1,500 r/min	----
Advancer type	Digital type	----
C.D.I.:		
Magneto model/manufacturer	F4T260/MITSUBISHI	----
Pickup coil resistance/color	445 ~ 545 Ω at 20 °C (68 °F)/ White/Red – White/Green	----
Rotor rotation direction detection coil resistance/color	0.069 ~ 0.085 Ω at 20 °C (68 °F)/ Red – White/Blue	----
C.D.I. unit model/manufacturer	F8T37971/MITSUBISHI	----
Ignition coil:		
Model/manufacturer	2JN/YAMAHA	----
Minimum spark gap	6 mm (0.24 in)	----
Primary winding resistance	0.18 ~ 0.28 Ω at 20 °C (68 °F)	----
Secondary winding resistance	6.32 ~ 9.48 kΩ at 20 °C (68 °F)	----
Spark plug cap:		
Type	Resin type	----
Resistance	10 kΩ	----
Charging system:		
Type	A.C. magneto generator	----
Model/manufacturer	F4T260/MITSUBISHI	----
Nominal output	14 V 16 A at 5,000 r/min	----
Charging coil resistance/color	0.43 ~ 0.65 Ω at 20 °C (68 °F)/ White – White	----
Rectifier:		
Type	Semi conductor-short circuit	----
Model/manufacturer	SH640E-11/SHINDENGEN	----
No load voltage (DC)	14.1 ~ 14.9 V	----
Capacity	14 A	----
Withstand voltage	200 V	----
Electric starter system:		
Type	Constantmesh type	----
Starter motor		
Model/manufacturer	SM-13/MITSUBA	----
Output	0.8 kW	----
Armature coil resistance	0.025 ~ 0.035 Ω at 20 °C (68 °F)	----
Brush overall length	12.5 mm (0.49 in)	5 mm (0.20 in)
Spring force	7.65 ~ 10.01 N (27.54 ~ 36.03 oz)	----
Commutator diameter	28 mm (1.10 in)	27 mm (1.06 in)
Mica undercut	0.7 mm (0.03 in)	----

Item	Standard	Limit
Starter relay		
Model/manufacturer	MS5F-721/JIDECO	----
Amperage rating	180 A	----
Coil winding resistance	4.18 ~ 4.62 Ω at 20 °C (68 °F)	----
Thermostat switch:		
Thermostat switch 1		
Model/manufacturer	5GH/NIPPON THERMOSTAT	----
Thermostat switch 2		
Model/manufacturer	5LP/NIPPON THERMOSTAT	----
Circuit breaker:		
Type	Fuse	----
Amperage for individual circuit		
Fuse	20 A × 1	----
Reserve	20 A × 1	----

EB201000

HOW TO USE THE CONVERSION TABLE

All specification data in this manual are listed in SI and METRIC UNITS.
Use this table to convert METRIC unit data to IMPERIAL unit data.

Ex.

METRIC		MULTIPLIER		IMPERIAL
** mm	×	0.03937	=	** in
2 mm	×	0.03937	=	0.08 in

CONVERSION TABLE

METRIC TO IMPERIAL			
	Metric unit	Multiplier	Imperial unit
Torque	m·kg m·kg cm·kg cm·kg	7.233 86.794 0.0723 0.8679	ft·lb in·lb ft·lb in·lb
Weight	kg g	2.205 0.03527	lb oz
Speed	km/hr	0.6214	mph
Distance	km m m cm mm	0.6214 3.281 1.094 0.3937 0.03937	mi ft yd in in
Volume/ Capacity	cc (cm^3) cc (cm^3) lt (liter) lt (liter)	0.03527 0.06102 0.8799 0.2199	oz (IMP liq.) cu·in qt (IMP liq.) gal (IMP liq.)
Misc.	kg/mm kg/cm^2 Centigrade (°C)	55.997 14.2234 9/5+32	lb/in psi (lb/in^2) Fahrenheit (°F)

EB202001

GENERAL TORQUE SPECIFICATIONS

This chart specifies torque for standard fasteners with standard I.S.O. pitch threads. Torque specifications for special components or assemblies are provided for each chapter of this manual. To avoid warpage, tighten multi-fastener assemblies in a crisscross fashion, in progressive stages, until the specified torque is reached. Unless otherwise specified, torque specifications require clean, dry threads. Components should be at room temperature.

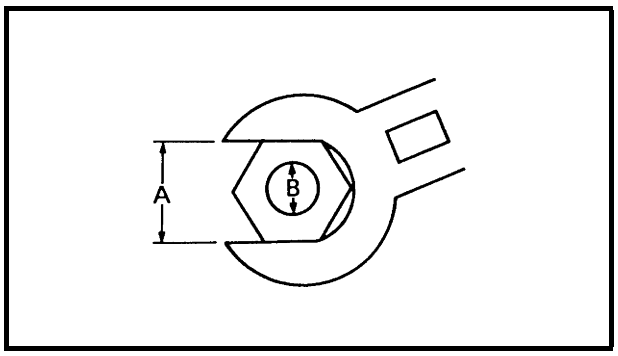

A: Distance between flats
B: Outside thread diameter

A (nut)	B (bolt)	General torque specifications		
		Nm	m•kg	ft•lb
10 mm	6 mm	6	0.6	4.3
12 mm	8 mm	15	1.5	11
14 mm	10 mm	30	3.0	22
17 mm	12 mm	55	5.5	40
19 mm	14 mm	85	8.5	61
22 mm	16 mm	130	13.0	94

LUBRICATION POINTS AND LUBRICANT TYPES

ENGINE

Lubrication points	Lubricant type
Oil seal lips (all)	LS
O-ring (all)	LS
Bearings (all)	E
Crank pin	E
Connecting rod (bearing)	E
Camshaft sprocket	M
Crankshaft	E
Piston surface/piston rings	E
Piston pin	E
Primary drive gear/primary driven gear	E
Valve stem/valve stem end	M
Rocker arm shaft	E
Rocker arm	M
Camshaft lobe/journal	M
Oil pump shaft, rotor, housing	E
Oil filter O-ring	E
Starter idle gear/shaft	E
Transmission gear (wheel/pinion)	M
Axle (main/drive)	M
Shift fork/guide bar	E
Shift drum/shift shaft/shift cam stopper ball	E
Shift lever/shift guide	LS
Crankcase mating surfaces	Sealant (Quick Gasket®) Yamaha bond No.1215
Cylinder head and cylinder head cover mating surfaces	Sealant (Quick Gasket®) Yamaha bond No.1215
AC magneto lead grommet (AC magneto cover)	Sealant (Quick Gasket®) Yamaha bond No.1215

COOLANT FLOW DIAGRAMS

① Radiator
② Radiator fan
③ Radiator outlet hose
④ Water pump inlet hose
⑤ Water pump
⑥ Water jacket outlet pipe
⑦ Thermostat inlet hose
⑧ Thermostat
⑨ Radiator inlet hose
⑩ Thermo switch 2
⑪ Thermo switch 1

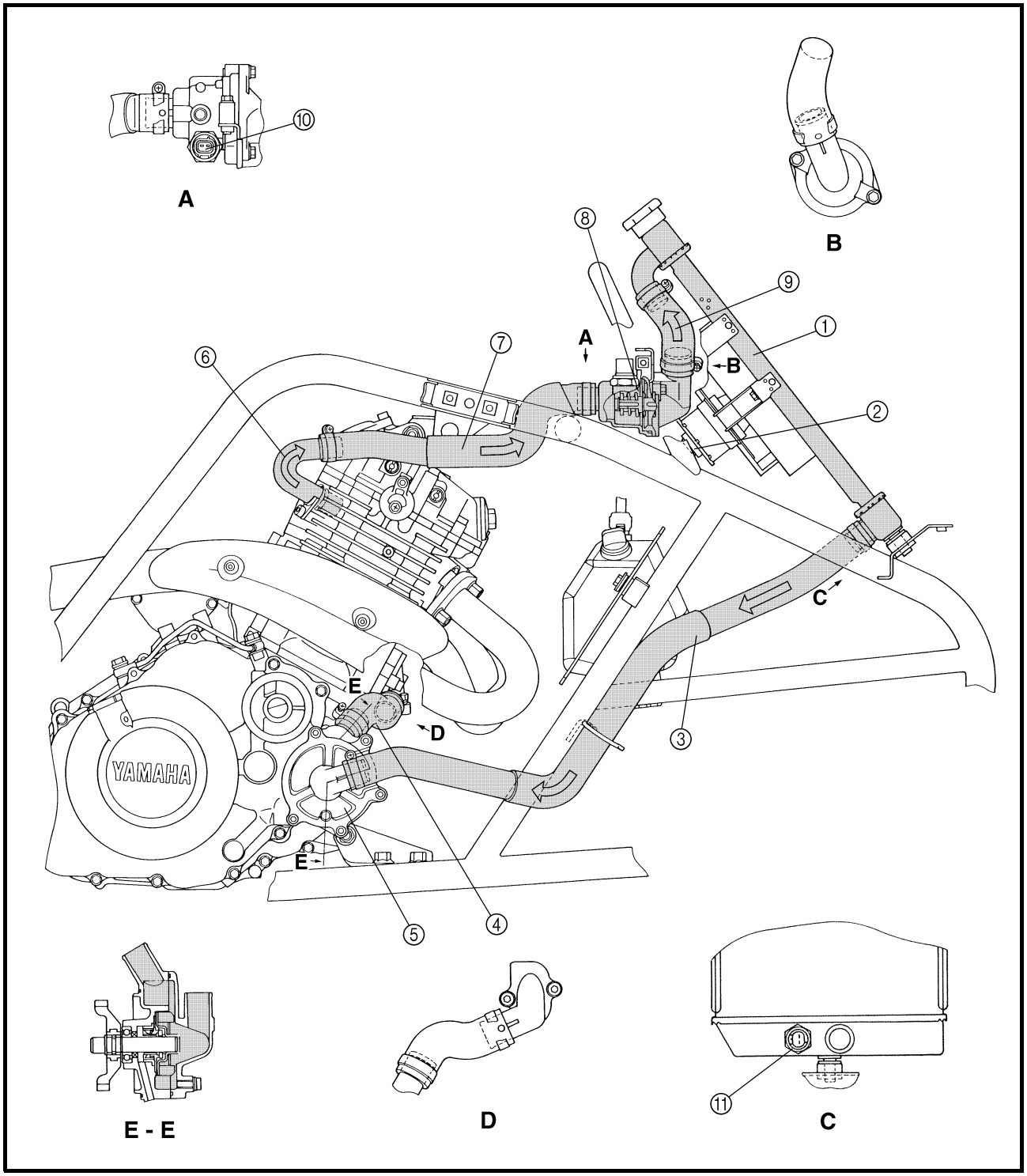

OIL FLOW DIAGRAMS

① Oil tank
② Oil pipe 2
③ Oil pipe 1

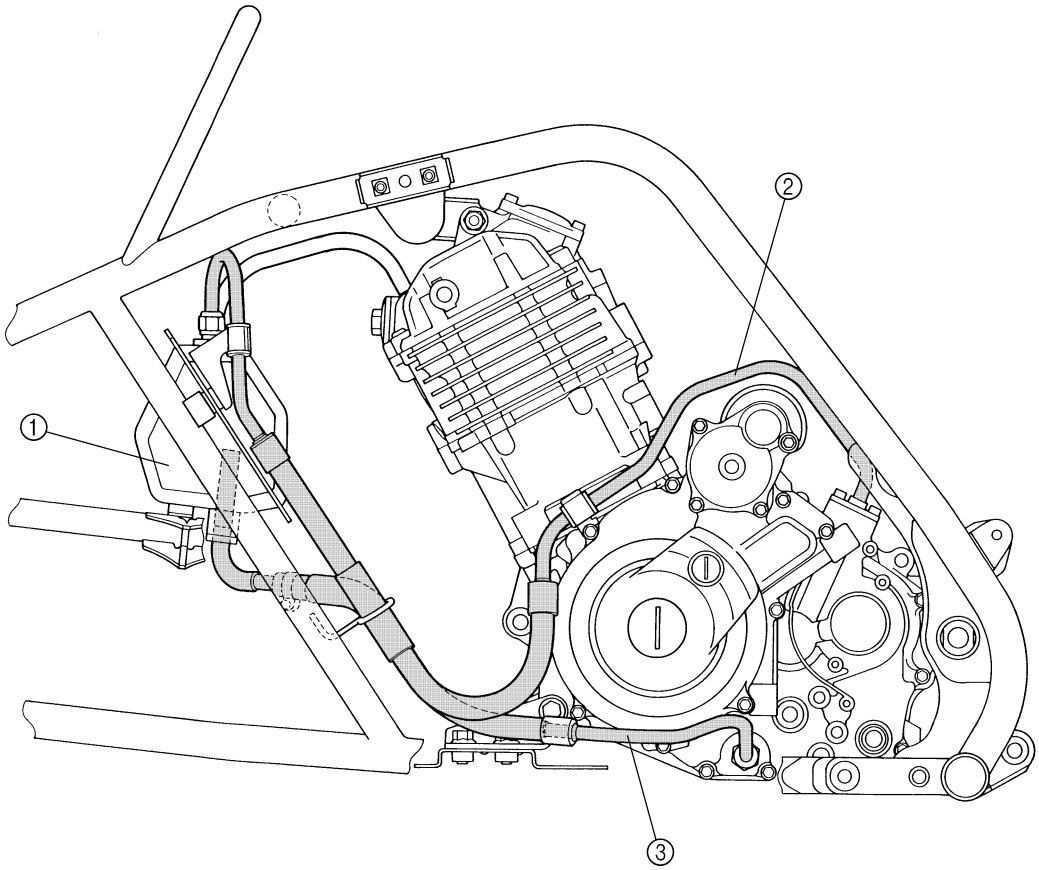

① Oil delivery pipe 2
② Oil delivery pipe 1
③ Oil filter
④ Crankshaft
⑤ Oil pump

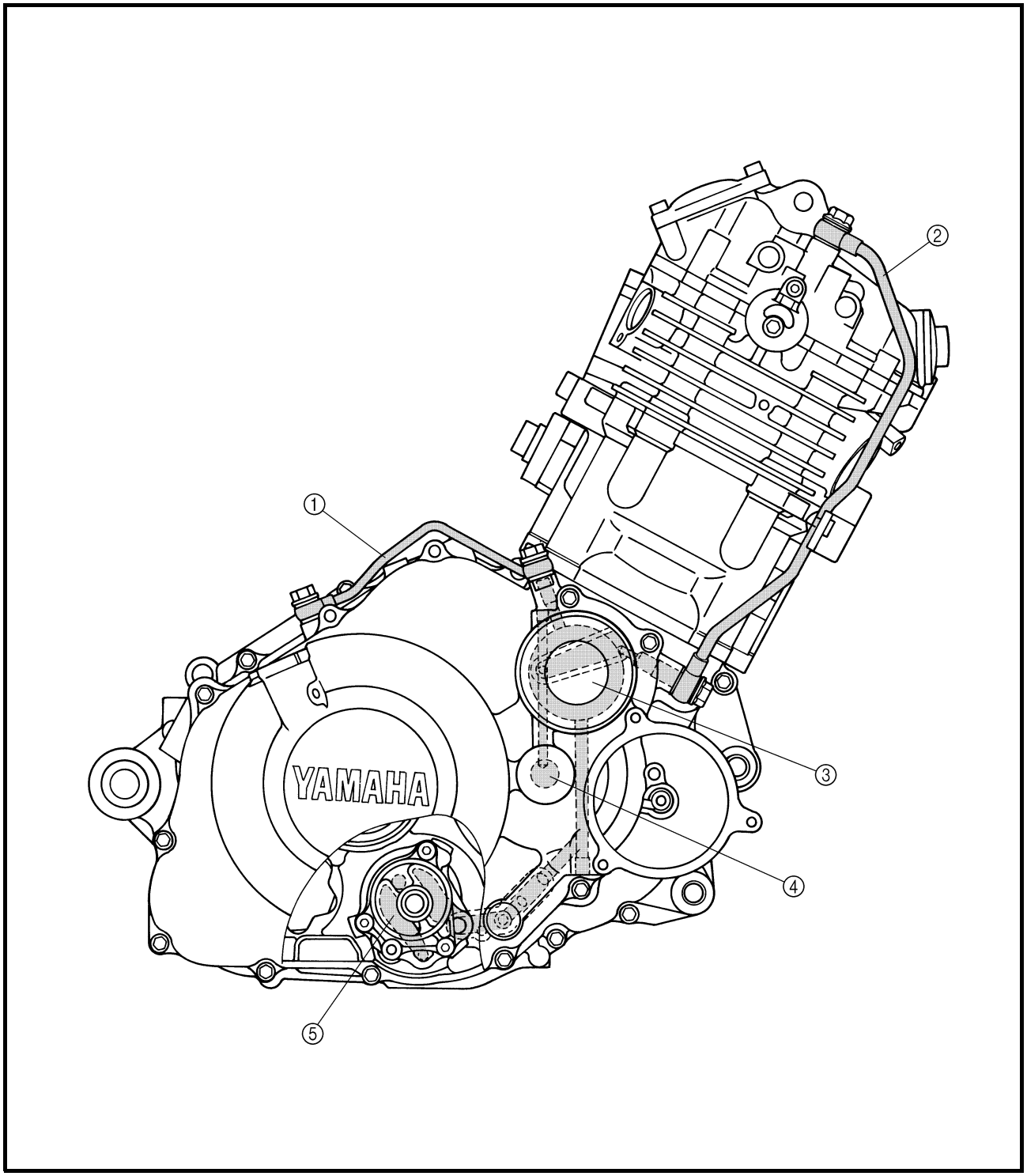

① Oil pipe 2
② Drive axle
③ Main axle
④ Engine oil drain bolt (engine)
⑤ Oil pipe 1
⑥ Oil strainer
⑦ Shift drum

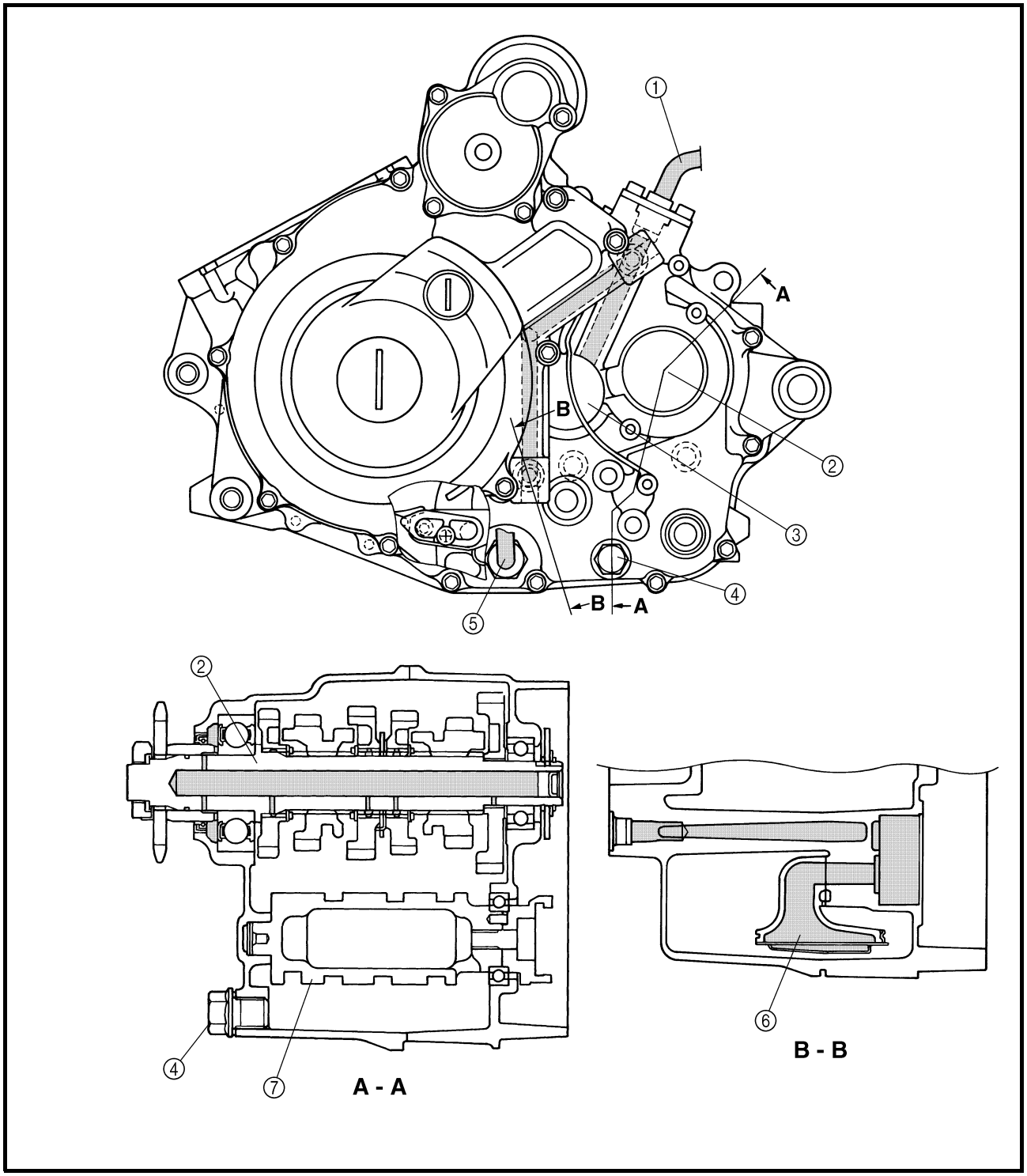

① Oil delivery pipe 2
② Oil filter cartridge
③ Oil pump rotor 1
④ Oil pump rotor 2
⑤ Oil pipe 1
⑥ Main axle

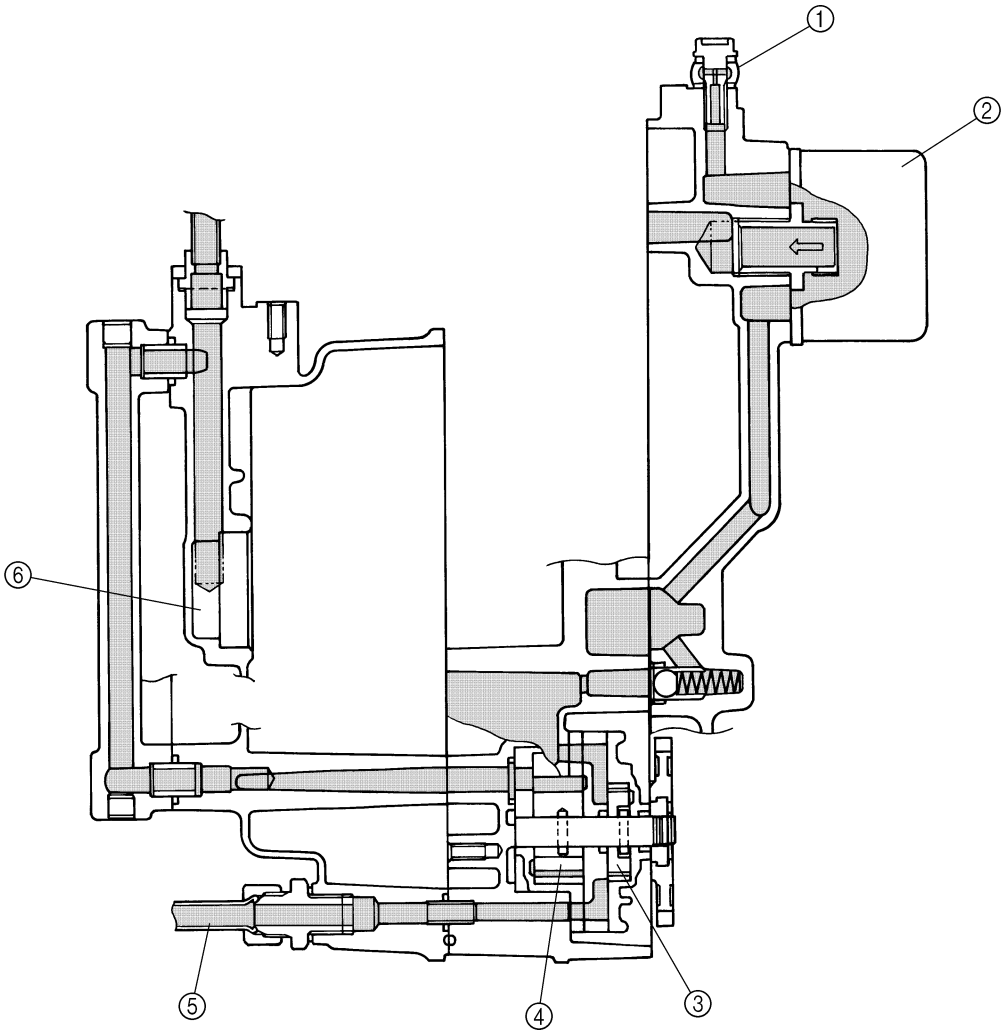

CABLE ROUTING

① Parking brake cable
② Starter cable
③ Clutch cable
④ Throttle cable
⑤ Front brake hose
⑥ Front brake switch
⑦ Park switch

A Fasten the handlebar switch lead, park switch lead and clutch switch lead to the handlebar with the plastic band.
B Fasten the front brake switch lead to the handlebar with the plastic band.

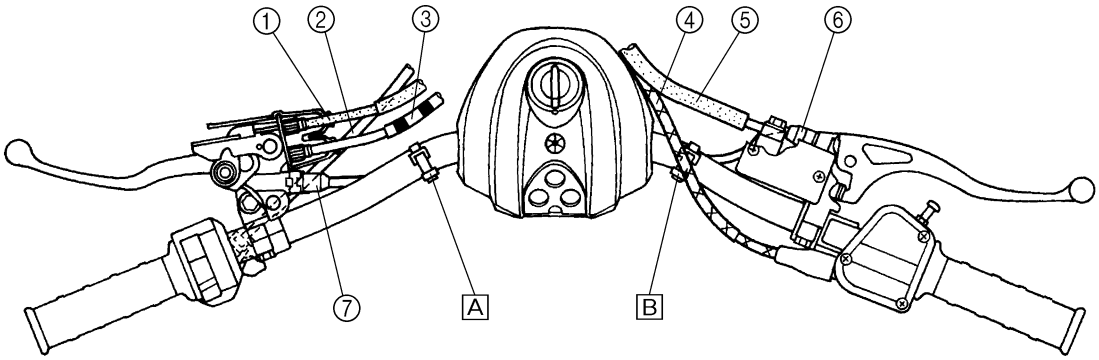

① Front brake hose
② Throttle cable
③ Main switch lead
④ Indicator light lead
⑤ Clutch cable
⑥ Parking brake cable
⑦ Starter cable
⑧ Coolant reservoir hose
⑨ Wire harness
⑩ Ignition coil lead
⑪ Headlight lead coupler (left)
⑫ Brake pipe
⑬ Headlight lead coupler (right)
⑭ Radiator fan breather hose
⑮ Headlight lead (right)

A Pass the throttle cable through the cable guide.
B Pass the clutch cable, parking brake cable and starter cable through the cable guide.
C Fasten the left and right headlight lead, radiator fan lead and thermo switch 1 lead to the frame with the plastic band.

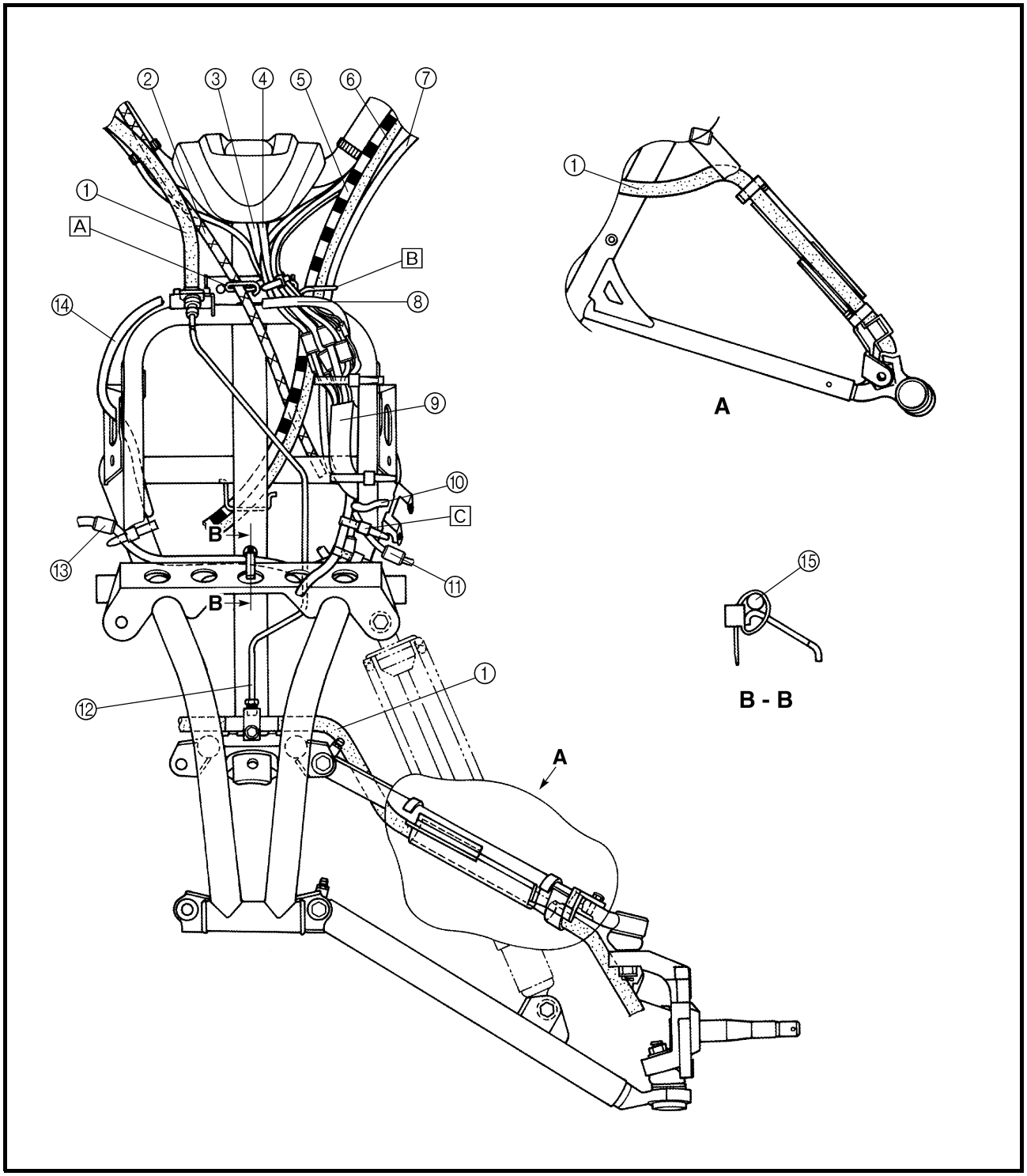

① Throttle cable
② Fuel tank breather hose
③ Fuel hose
④ Carburetor air vent hose
⑤ Negative battery lead
⑥ AC magneto lead
⑦ Thermo switch 1
⑧ Coolant reservoir hose
⑨ Starter cable

A Put the wire harness and coolant reservoir hose with the plastic holder.
B Fasten the wire harness, AC magneto lead, speed sensor lead, negative battery lead and rear brake switch lead with the plastic band.
C 70 mm (2.76 in)
D 25 ~ 35 mm (0.98 ~ 1.38 in)
E 60 mm (2.36 in)
F 0 ~ 5 mm (0 ~ 0.20 in)
G 80 ~ 90 mm (3.15 ~ 3.54 in)

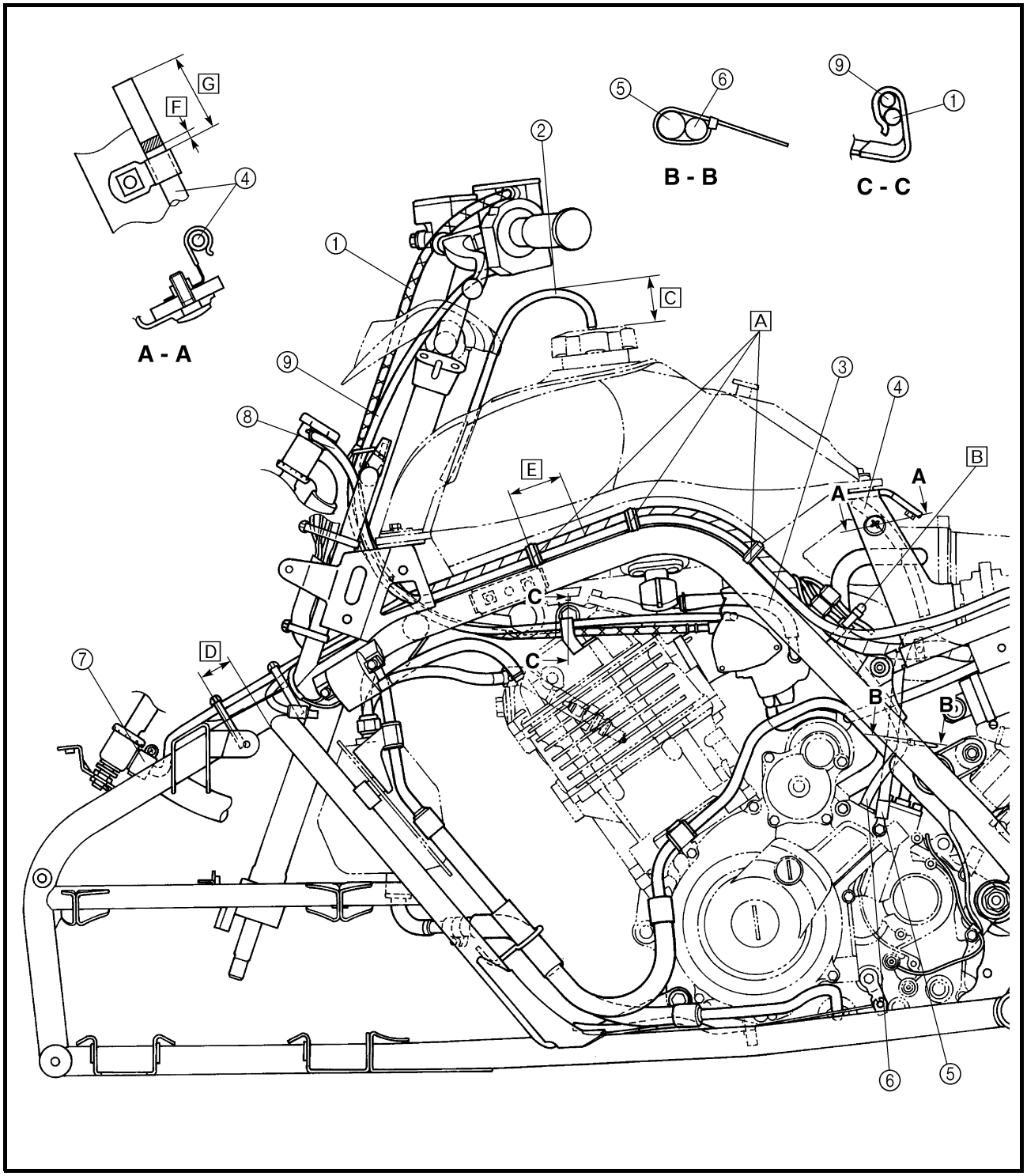

① Coolant reservoir hose
② Carburetor air vent hose
③ Reservoir tank breather hose
④ Rectifier/regulator
⑤ CDI unit
⑥ Negative battery lead
⑦ AC magneto lead
⑧ Wire harness
⑨ Starter motor lead
⑩ Tail/brake light lead
⑪ Rectifier/regulator lead

[A] Pass the negative battery lead between the wire harness and frame.

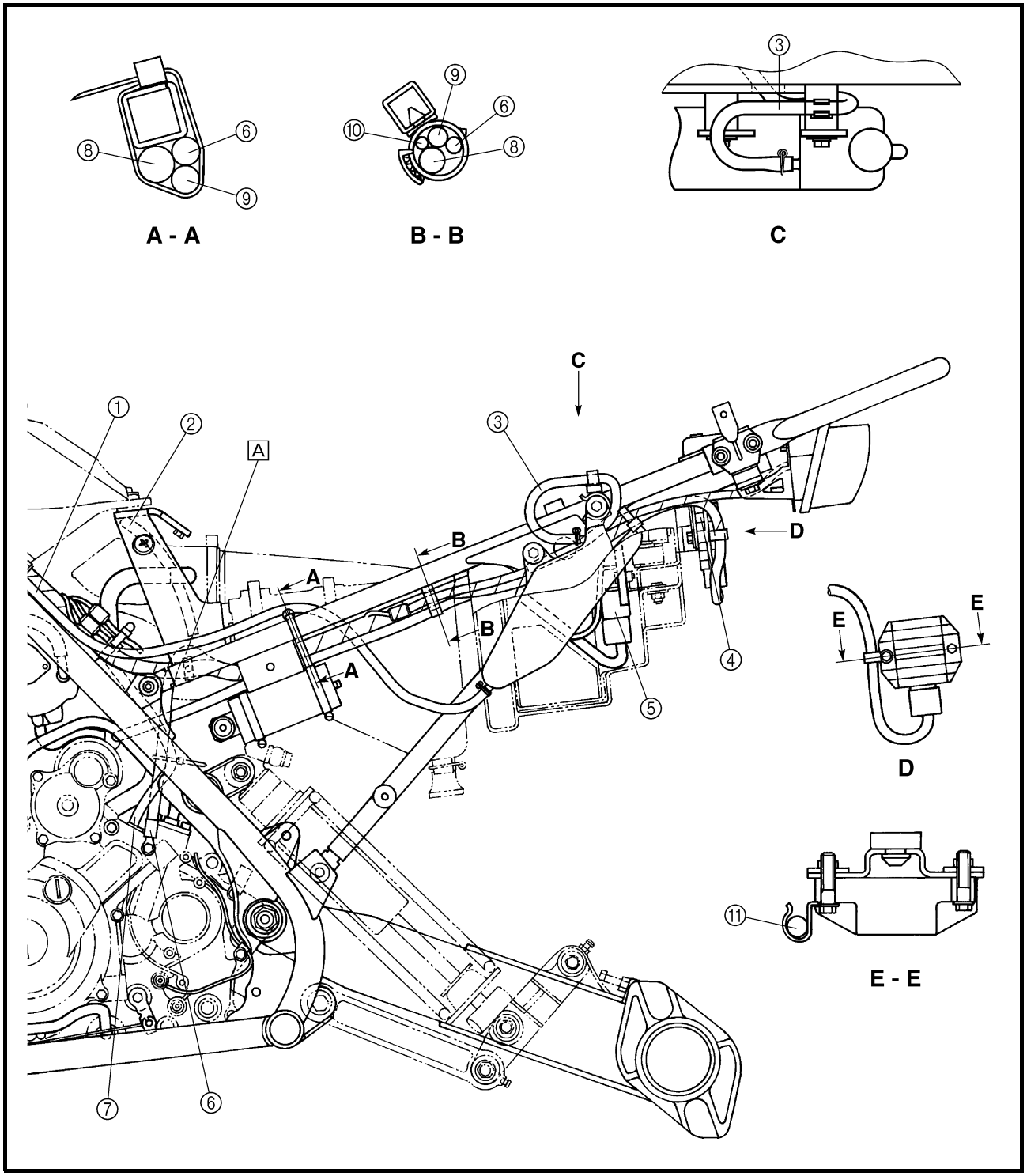

① Radiator fan breather hose
② Reverse control cable
③ Parking brake cable
④ Clutch cable

A Fasten the reverse control cable to the frame with the plastic band.
B 15 ~ 25 mm (0.59 ~ 0.98 in)

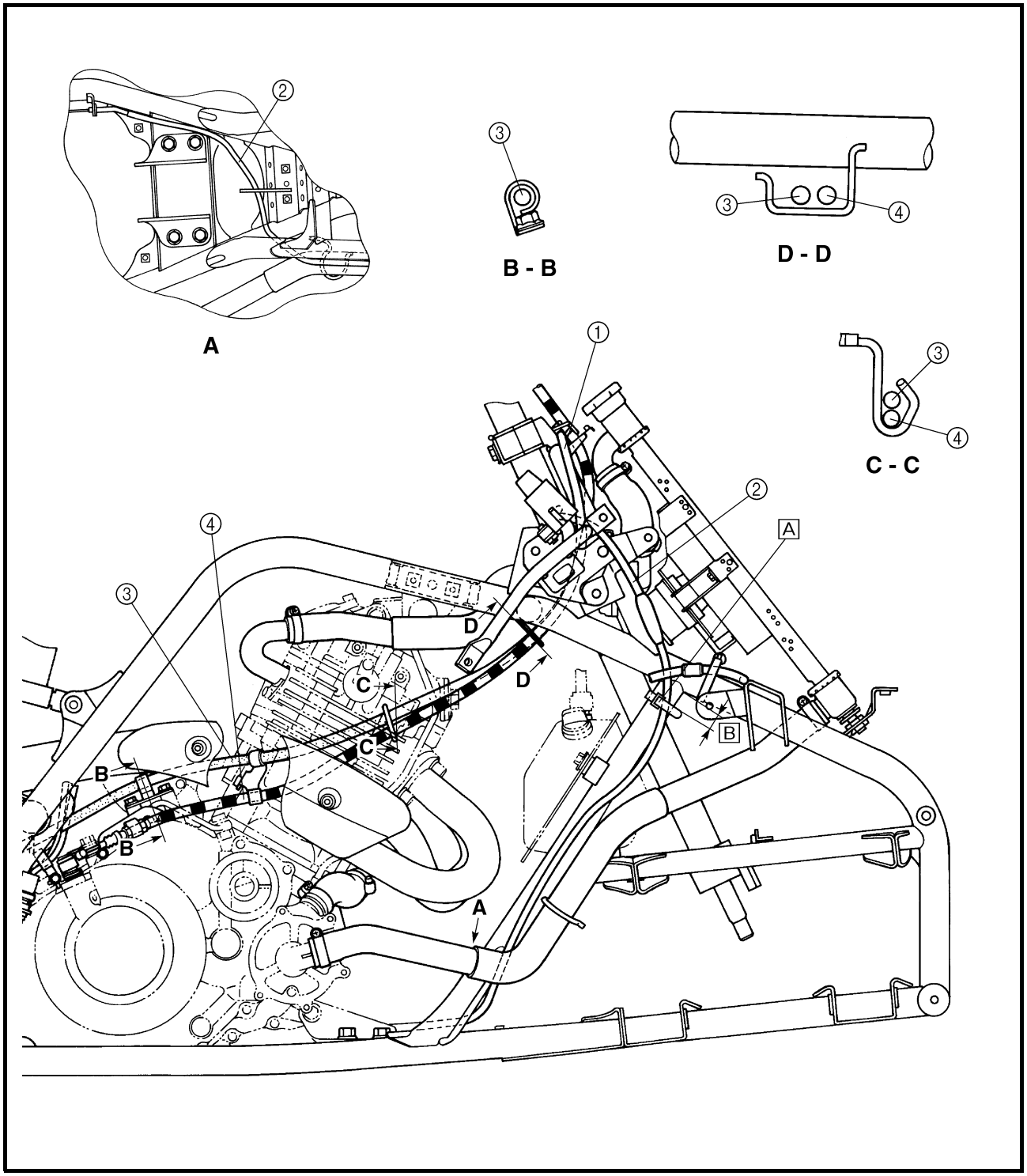

① Rear brake hose
② Parking brake cable
③ Negative battery lead
④ AC magneto lead
⑤ Crankcase breather hose
⑥ Carburetor drain hose
⑦ Rear brake switch
⑧ Speed sensor
⑨ Speed sensor lead
⑩ Rear brake switch lead

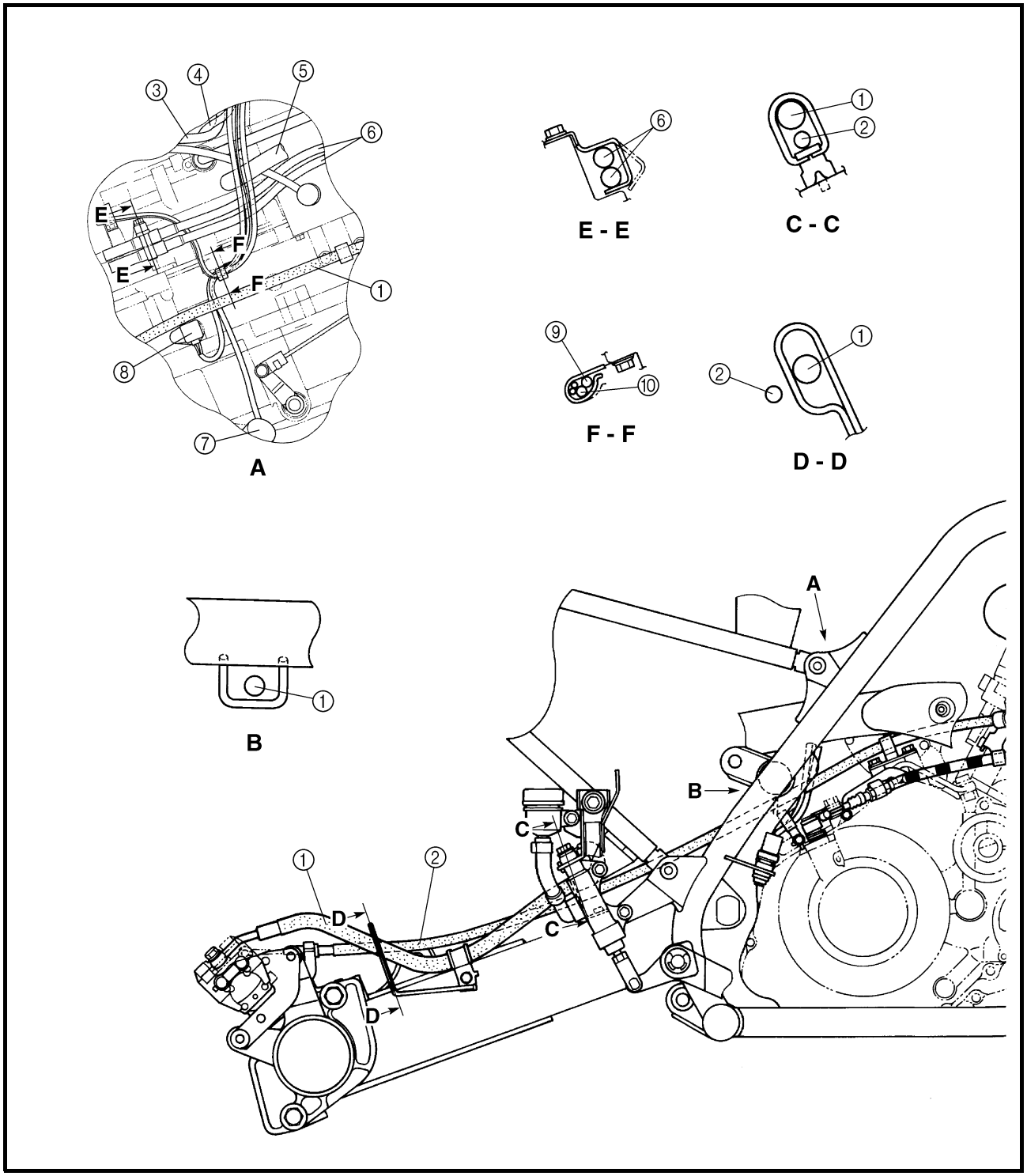

① Thermo switch 1 lead
② Headlight lead (right)
③ Radiator fan breather hose
④ Thermo switch 2 lead
⑤ Carburetor breather hose
⑥ Headlight lead (left)
⑦ Wire harness
⑧ Coolant reservoir hose

[A] Fasten the fan motor lead, headlight lead (right) and thermo switch 1 lead to the frame with the plastic band.

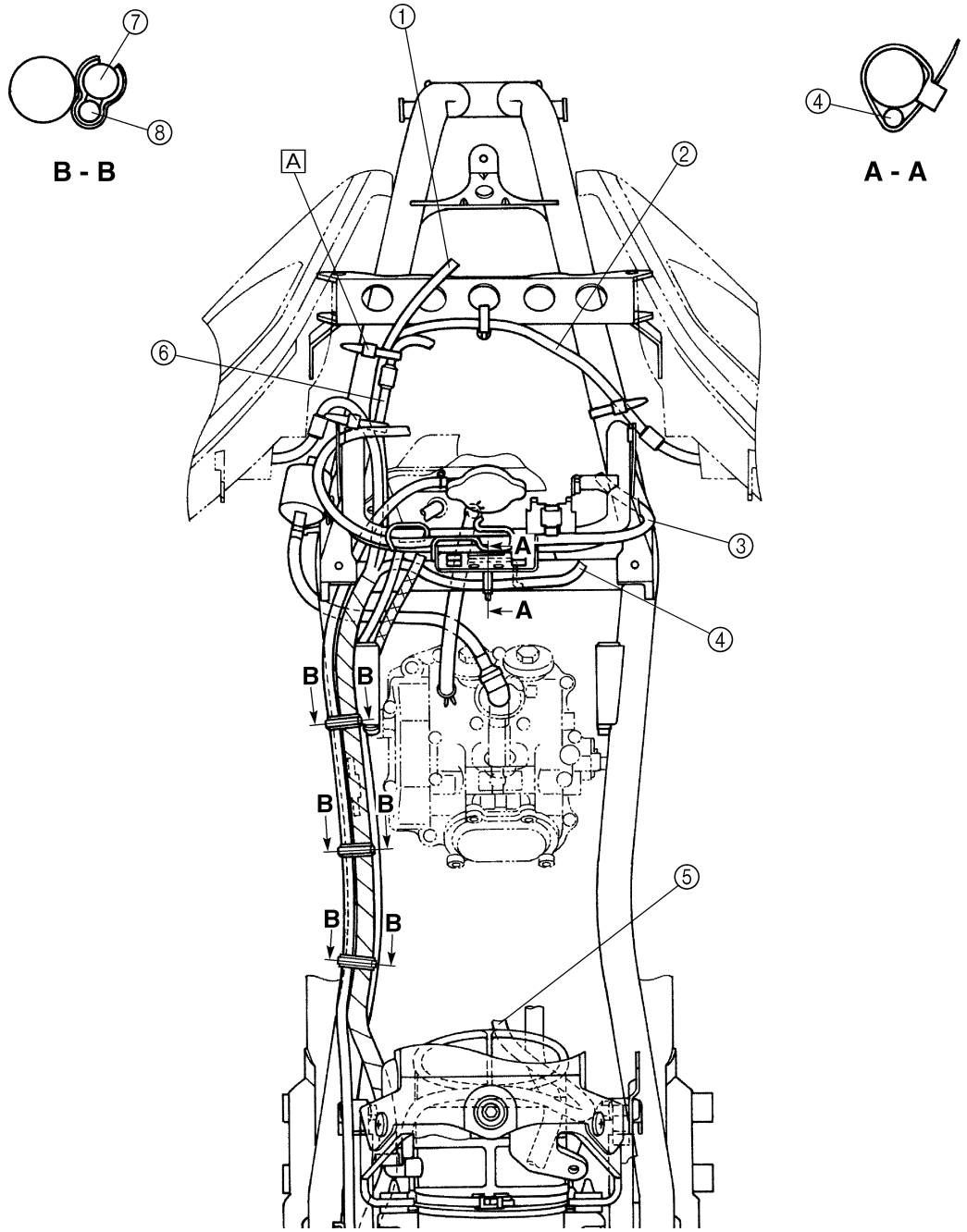

① Positive battery lead
② Tail/brake light lead
③ Coolant reservoir breather hose
④ Negative battery lead
⑤ Coolant reservoir hose
⑥ Starter motor lead
⑦ Wire harness
⑧ Rectifier/regulator lead

A Fasten the wire harness with the plastic clamp.
B Fasten the starter motor lead and starter relay lead with the plastic clamp.

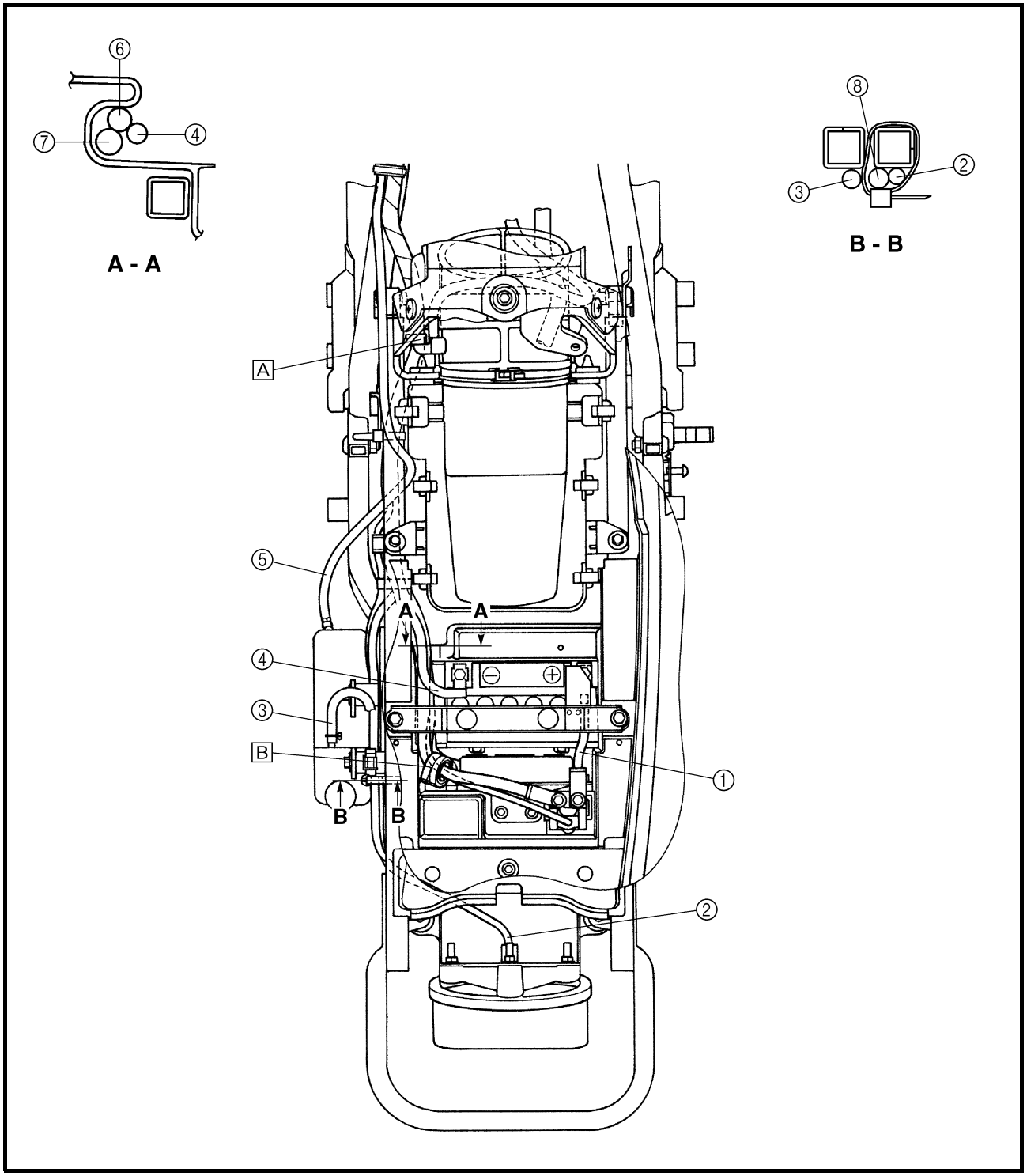

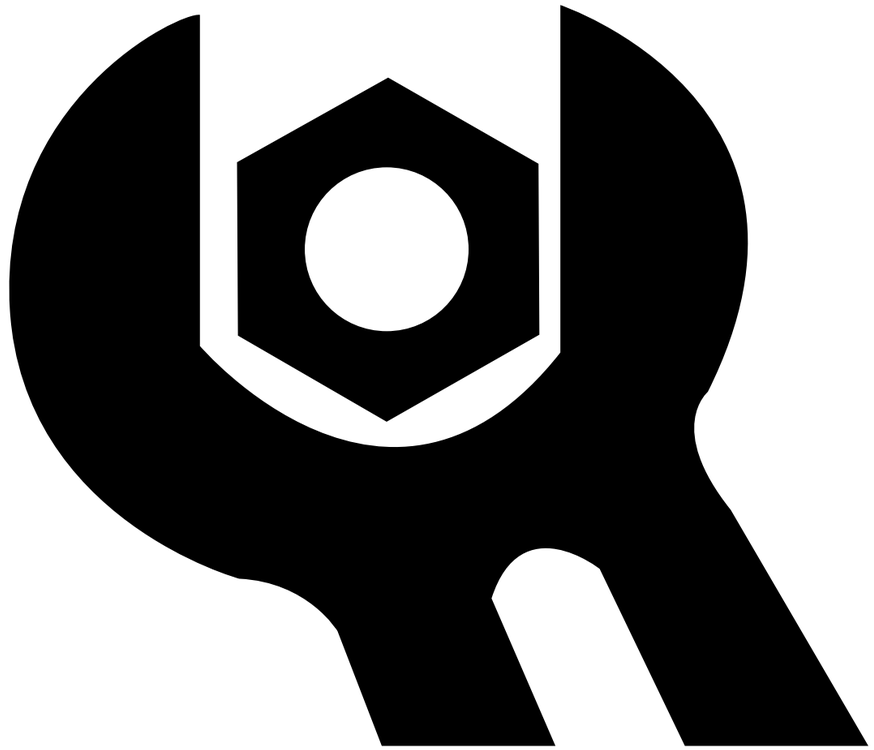

CHK
ADJ

3

CHAPTER 3.
PERIODIC CHECKS AND ADJUSTMENTS

EB300000

PERIODIC CHECKS AND ADJUSTMENTS

INTRODUCTION

This chapter includes all information necessary to perform recommended inspections and adjustments. These preventive maintenance procedures, if followed, will ensure more reliable vehicle operation and a longer service life. The need for costly overhaul work will be greatly reduced. This information applies to vehicles already in service as well as to new vehicles that are being prepared for sale. All service technicians should be familiar with this entire chapter.

EB301000

PERIODIC MAINTENANCE/LUBRICATION INTERVALS

ITEM	ROUTINE	INITIAL			EVERY	
		1 month	3 months	6 months	6 months	1 year
Valves* (See page 3-8.)	• Check valve clearance. • Adjust if necessary.	○		○	○	○
Cooling system (See page 3-27.)	• Check coolant leakage. • Repair if necessary. • Replace coolant every 24 months.	○	○	○	○	○
Spark plug (See page 3-16.)	• Check condition. • Adjust gap and clean. • Replace if necessary.	○	○	○	○	○
Air filter element (See page 3-24.)	• Clean. • Replace if necessary.	Every 20 ~ 40 hours (More often in wet or dusty areas.)				
Carburetor* (See page 3-11.)	• Check and adjust idle speed/starter operation. • Adjust if necessary.		○	○	○	○
Crankcase breather system*	• Check breather hose for cracks or damage. • Replace if necessary.			○	○	○
Exhaust system*	• Check for leakage. • Retighten if necessary. • Replace gasket if necessary.			○	○	○
Spark arrester (See page 3-31.)	• Clean.			○	○	○
Fuel line*	• Check fuel hose for cracks or damage. • Replace if necessary.			○	○	○
Engine oil (See page 3-19.)	• Replace (Warm engine before draining).	○		○	○	○
Engine oil filter cartridge	• Replace if necessary.	○		○		○
Drive chain (See page 3-40.)	• Check and adjust slack/alignment/clean/lube.	○	○	○	○	○
Brake* (See page 3-33.)	• Check operation/fluid leakage/See NOTE page 3-2. • Correct if necessary.	○	○	○	○	○
Clutch* (See page 3-24.)	• Check operation. • Adjust if necessary.	○		○	○	○
Wheels* (See page 4-3.)	• Check balance/damage/runout. • Replace if necessary.	○		○	○	○
Wheel bearings*	• Check bearing assembly for looseness/damage. • Replace if damaged.	○		○	○	○
Steering system* (See page 3-42.)	• Check operation. • Replace if damaged. • Check toe-in. • Adjust if necessary.	○	○	○	○	○
Upper and lower arm pivot and steering shaft*	• Lubricate every 6 months.**			○	○	○
Rear arm pivot*	• Lubricate every 6 months.**			○	○	○
Fittings and fasteners*	• Check all chassis fittings and fasteners. • Correct if necessary.	○	○	○	○	○

* It is recommended that these items be serviced by a Yamaha dealer.
** Lithium soap base grease

NOTE:

- Recommended brake fluid: DOT 4
- Brake fluid replacement:

1. When disassembling the master cylinder or caliper cylinder, replace the brake fluid.
   Normally check the brake fluid level and add fluid as required.
2. On the inner parts of the master cylinder and caliper cylinder, replace the oil seals every two years.
3. Replace the brake hoses every four years, or if cracked or damaged.

WARNING

Indicates a potential hazard that could result in serious injury or death.

SEAT, FENDERS AND FUEL TANK

SEAT, FRONT PANEL, FOOTREST GUARDS AND ENGINE SKID PLATE

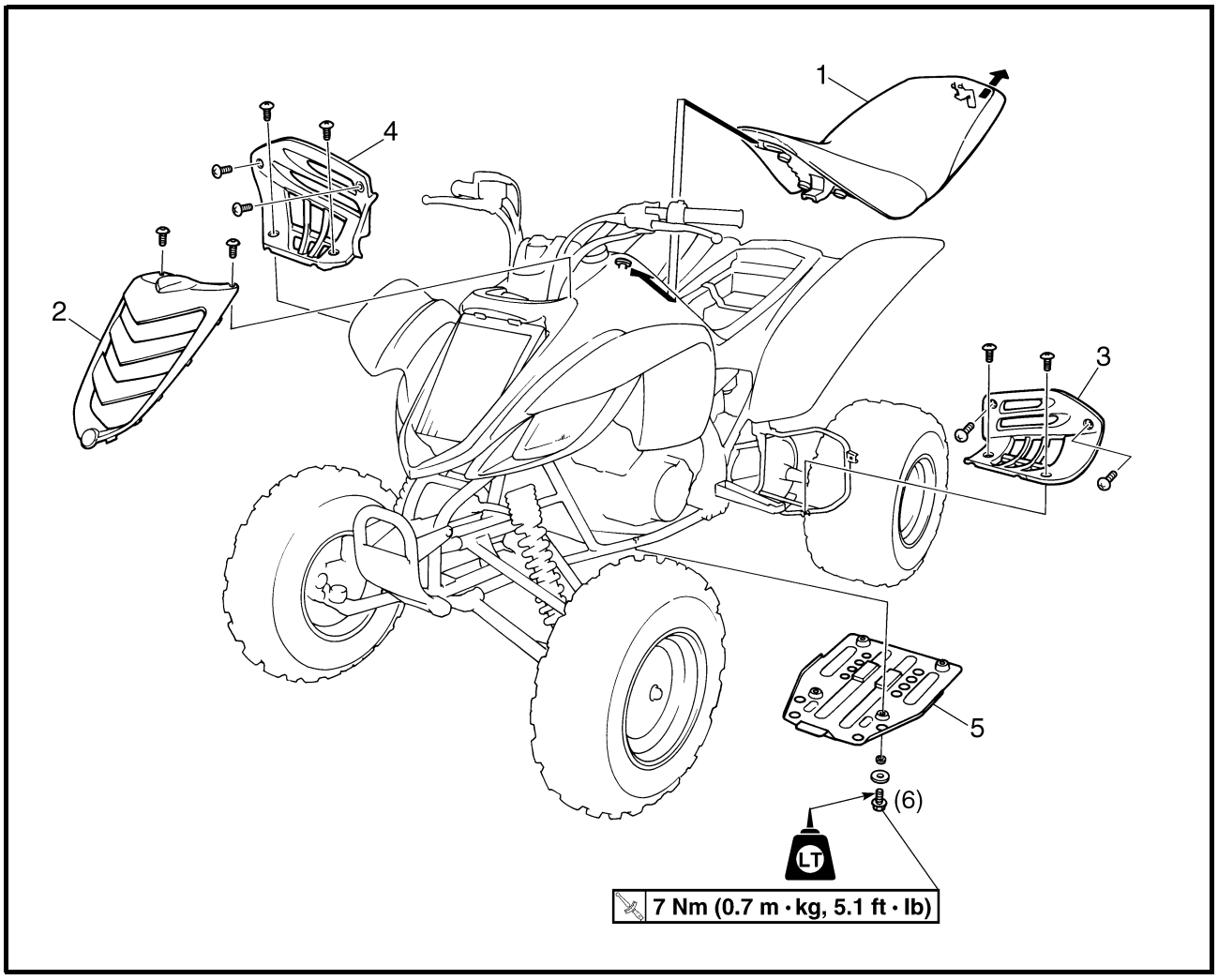

Order	Job name/Part name	Q'ty	Remarks
	Removing the seat, front panel, footrest guard and engine skid plate		Remove the parts in the order below.
1	Seat	1	**NOTE:** Pull back the seat lock lever, than pull up on the rear of the seat.
2	Front panel	1	
3	Left footrest guard	1	
4	Right footrest guard	1	
5	Engine skid plate	1	
			For installation, reverse the removal procedure.

HEADLIGHTS AND FRONT FENDER

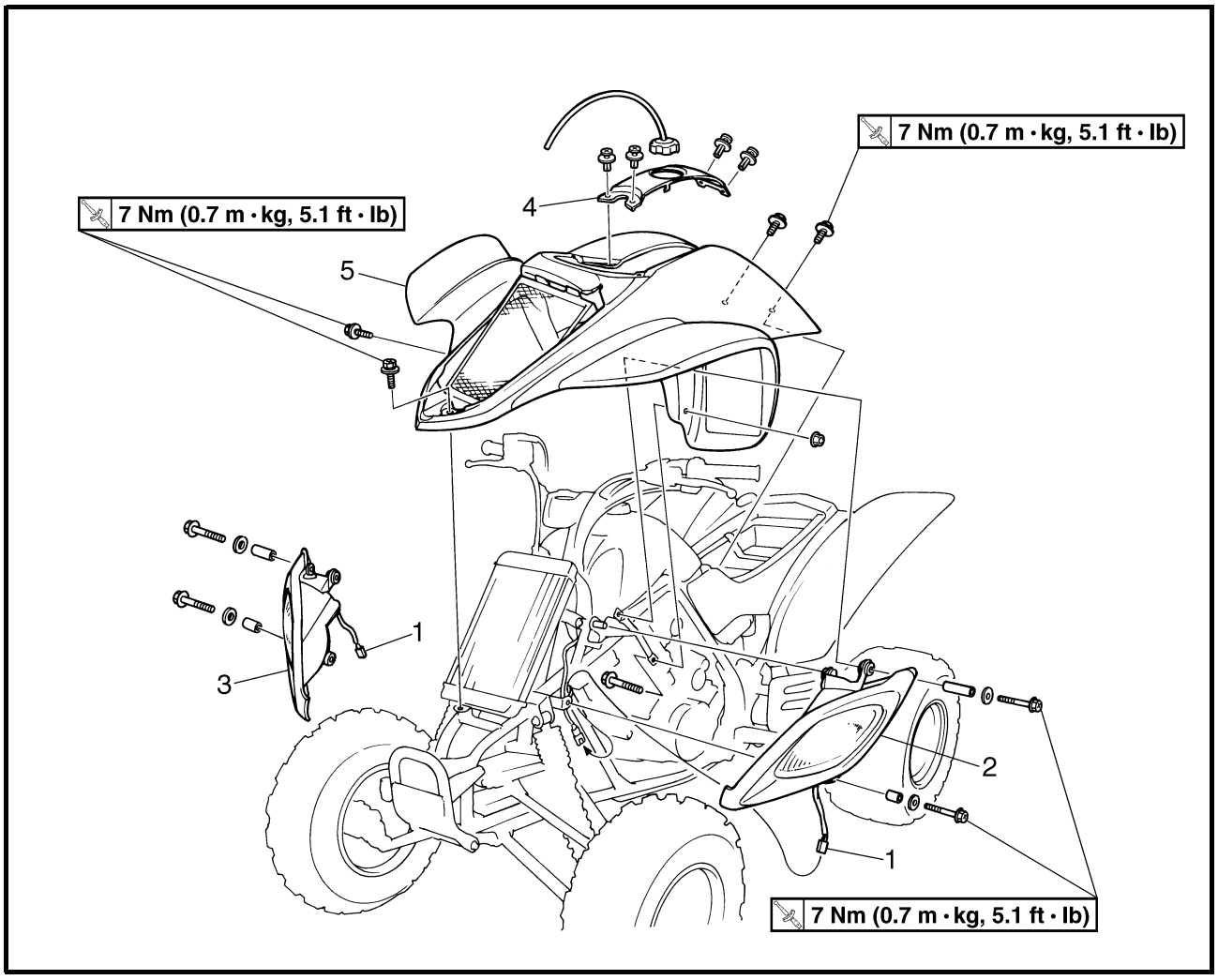

Order	Job name/Part name	Q'ty	Remarks
	Removing the headlight and front fender		Remove the parts in the order below.
	Seat and front panel		Refer to "SEAT, FRONT PANEL, FOOT-REST GUARDS AND ENGINE SKID PLATE".
1	Headlight coupler	2	Disconnect.
2	Left headlight	1	
3	Right headlight	1	
4	Fuel tank top panel	1	
5	Front fender	1	
			For installation, reverse the removal procedure.

REAR FENDER

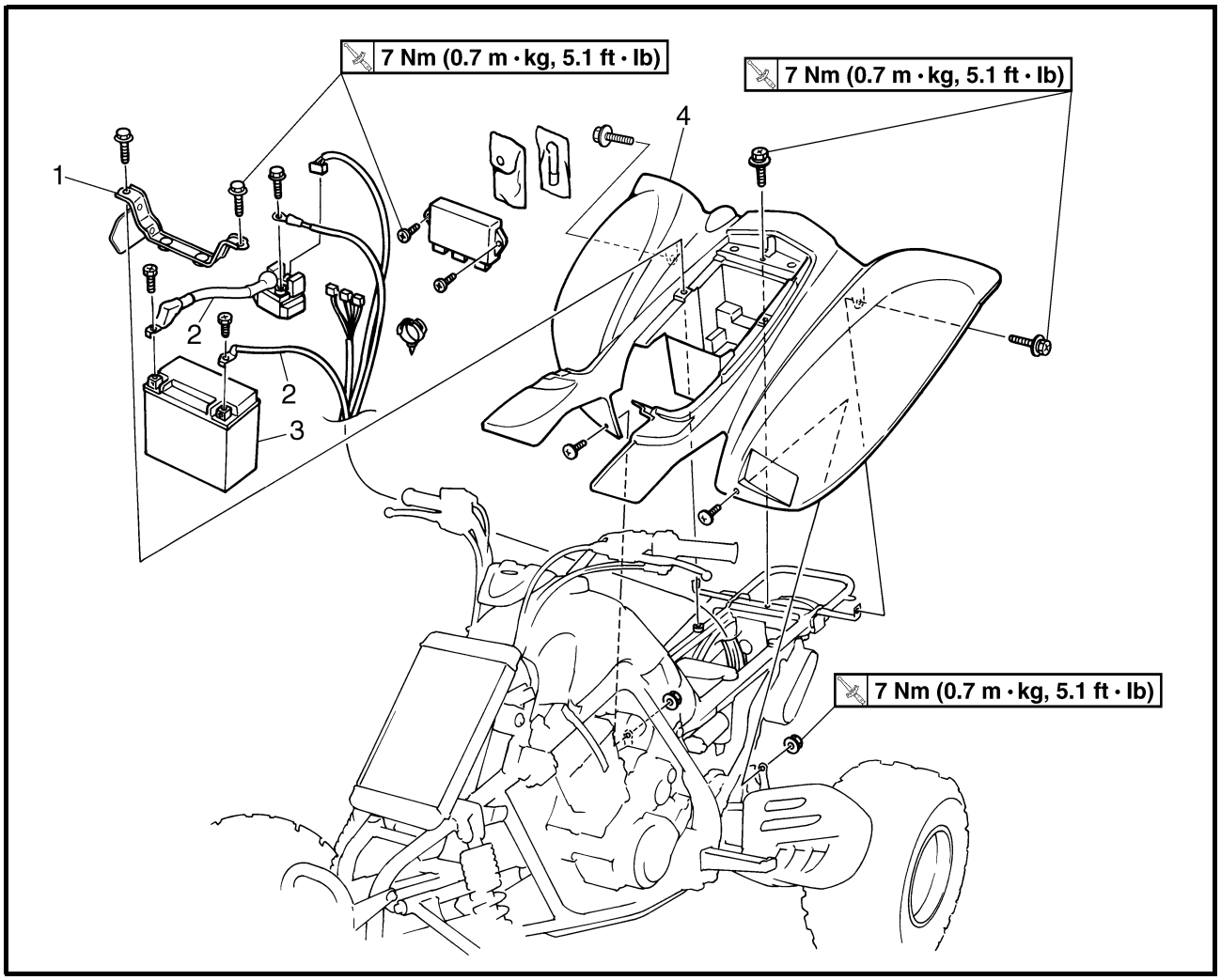

Order	Job name/Part name	Q'ty	Remarks
	Removing the rear fender		Remove the parts in the order below.
	Seat		Refer to "SEAT, FRONT PANEL, FOOT-REST GUARDS AND ENGINE SKID PLATE".
	Front fender		Refer to "HEADLIGHTS AND FRONT FENDER".
1	Battery holding bracket	1	
2	Battery lead	2	Disconnect. **CAUTION:** **First disconnect the negative lead, then disconnect the positive lead.**
3	Battery	1	
4	Rear fender	1	For installation, reverse the removal procedure.

FUEL TANK

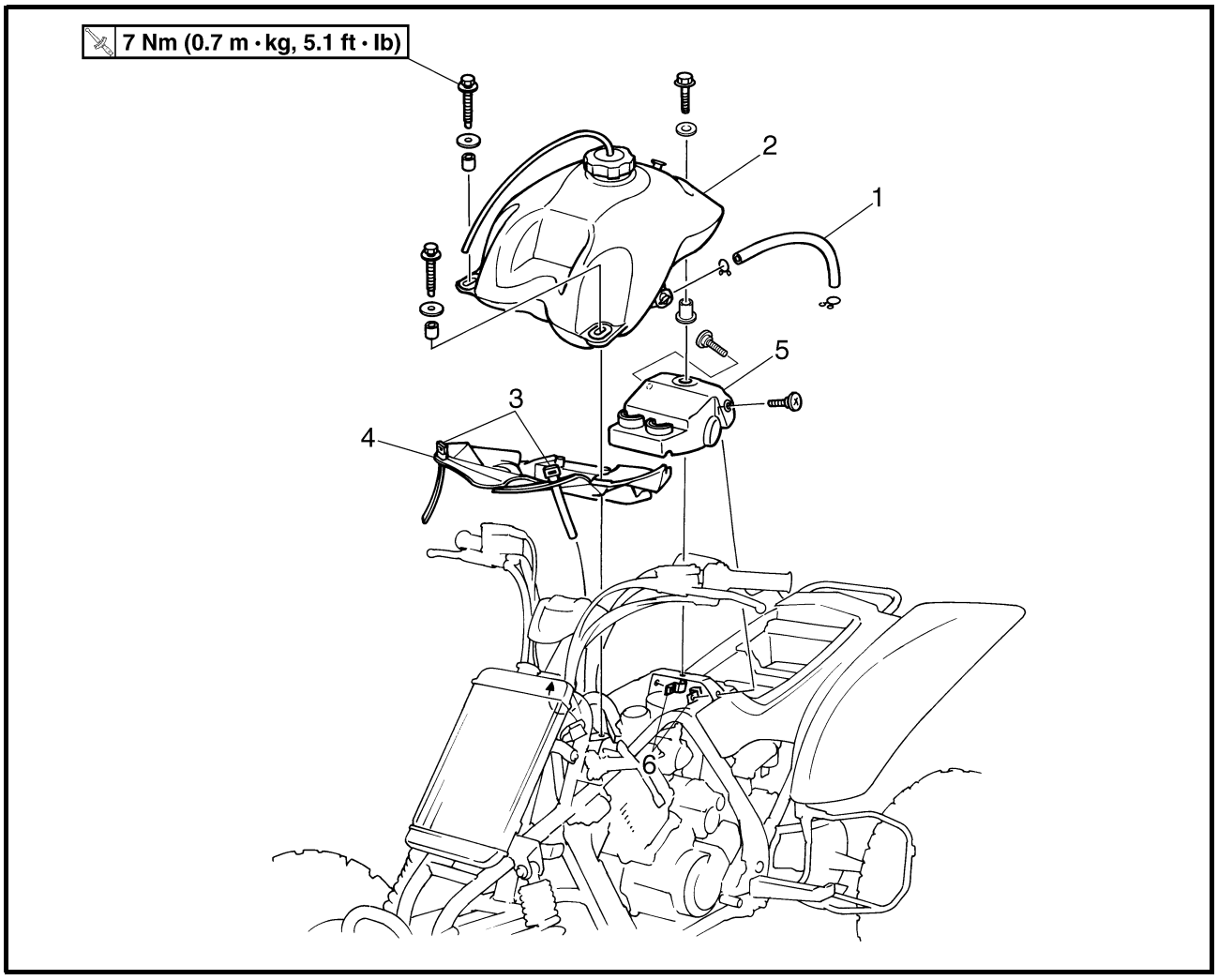

Order	Job name/Part name	Q'ty	Remarks
	Removing the fuel tank		Remove the parts in the order below.
	Seat and front panel		Refer to "SEAT, FRONT PANEL, FOOT-REST GUARDS AND ENGINE SKID PLATE".
	Front fender		Refer to "HEADLIGHTS AND FRONT FENDER".
1	Fuel hose	1	**NOTE:** Before disconnecting the fuel hose, turn the fuel cock to "OFF".
2	Fuel tank	1	**NOTE:** When installing the fuel tank, pass the fuel tank breather hose through the hole in the handlebar protector.
3	Plastic band	2	

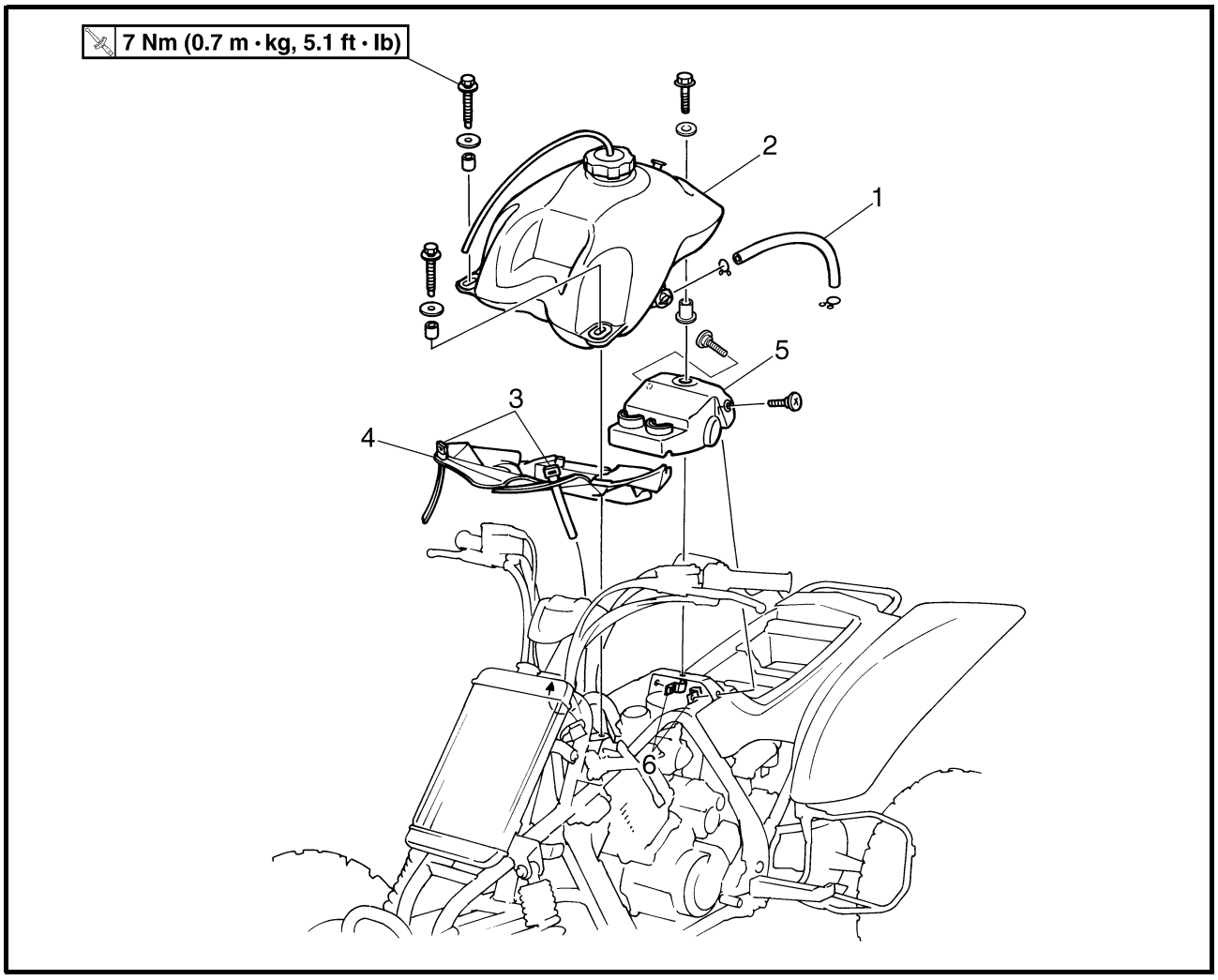

Order	Job name/Part name	Q'ty	Remarks
4	Rubber cover 1	1	
5	Rubber cover 2	1	
6	Hose holder	2	
			For installation, reverse the removal procedure.

ENGINE

ADJUSTING THE VALVE CLEARANCE

NOTE:
- The valve clearance must be adjusted when the engine is cool to the touch.
- Adjust the valve clearance when the piston is at the Top Dead Center (T.D.C.) on the compression stroke.

1.Remove:
- Seat
- Front fender
- Fuel tank

Refer to “SEAT, FENDERS AND FUEL TANK”.

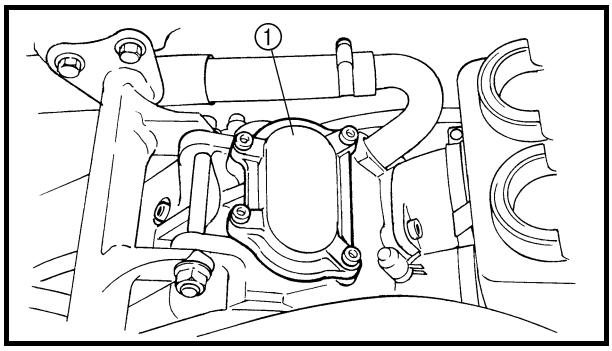

2.Remove:
- Tappet cover (intake) ①
- Tappet covers (exhaust) ②

3.Disconnect:
- Spark plug cap ③

4.Remove:
- Spark plug

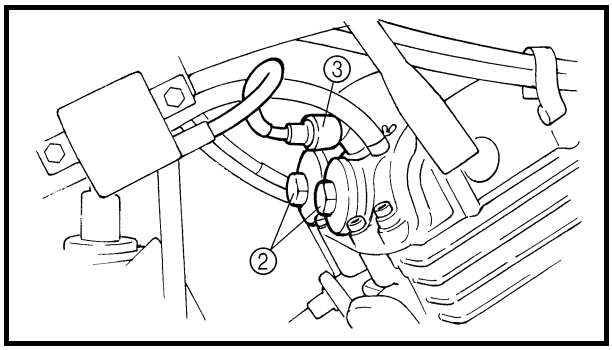

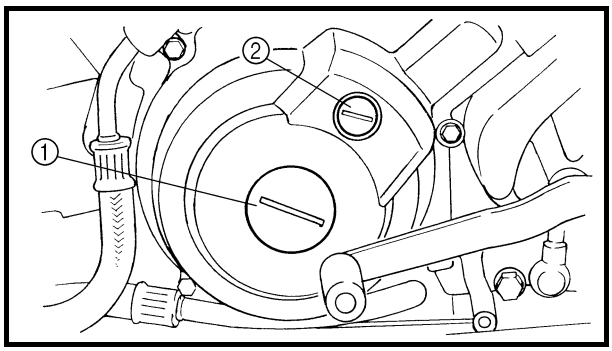

5.Remove:
- Crankshaft end accessing screw ①
- Timing mark accessing screw ②

6.Check:
- Valve clearance
  Out of specification → Adjust.

Valve clearance (cold):
Intake:
0.10 ~ 0.15 mm
(0.0039 ~ 0.0059 in)
Exhaust:
0.15 ~ 0.20 mm
(0.0059 ~ 0.0079 in)

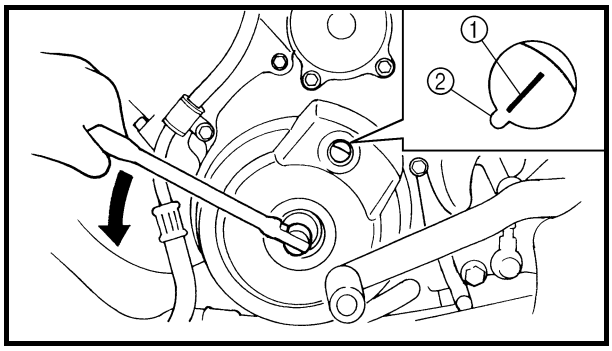

****

Checking steps:
- Turn the crankshaft counterclockwise with a wrench.
- Align the "I" mark ① on the rotor with the stationary pointer ② on the crankcase cover. When the "I" mark is aligned with the stationary pointer, the piston is at the Top Dead Center (T.D.C.).

NOTE:
- When the piston is at the Top Dead Center (T.D.C.) on the compression stroke, there should be clearance between the valve stem tips and their respective rocker arm adjusting screws.
- If there is no clearance, rotate the crankshaft counterclockwise one turn.

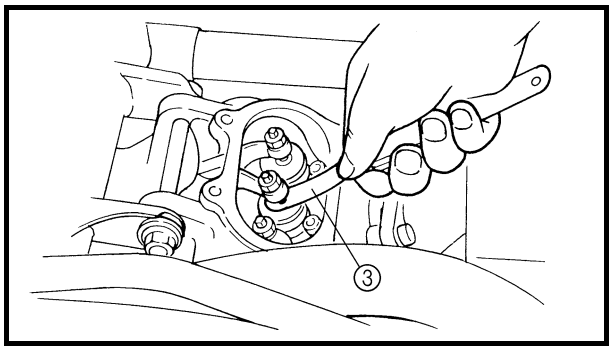

- Measure the valve clearance using a feeler gauge ③.

****

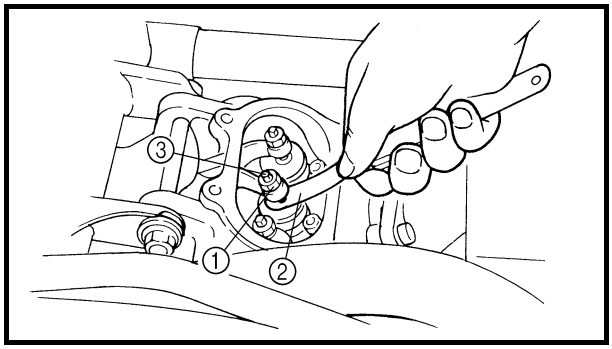

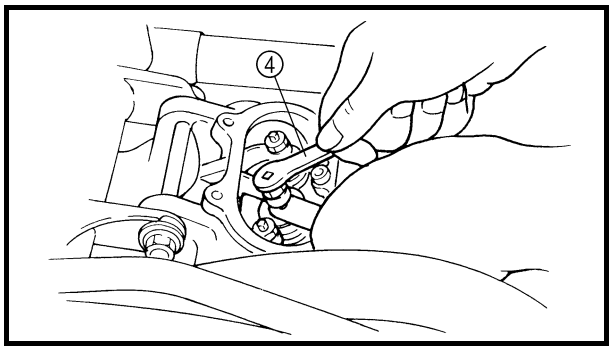

7.Adjust:
- Valve clearance

****

Adjustment steps:
- Loosen the locknut ①.
- Insert a feeler gauge ② between the adjuster end and the valve end.
- Turn the adjuster ③ clockwise or counter-clockwise with the tappet adjusting tool ④ until the proper clearance is obtained.

	**Tappet adjusting tool:** **P/N. YM-08035, 90890-01311**

- Hold the adjuster to prevent it from moving and then tighten the locknut.

	**Locknut:** **14 Nm (1.4 m • kg, 10 ft • lb)**

- Measure the valve clearance.
- If the clearance is incorrect, repeat the above steps until the proper clearance is obtained.

****

8.Install:
- All removed parts

NOTE:
Install all removed parts in the reverse order of their disassembly. Note the following points.

9.Install:
- Spark plug **18 Nm (1.8 m • kg, 13 ft • lb)**
- Tappet cover (intake) **10 Nm (1.0 m • kg, 7.2 ft • lb)**
- Tappet covers (exhaust) **12 Nm (1.2 m • kg, 8.7 ft • lb)**

10. Install:
- Fuel tank
- Front fender
- Seat

  Refer to “SEAT, FENDERS AND FUEL TANK”.

ADJUSTING THE TIMING CHAIN

Adjustment free.

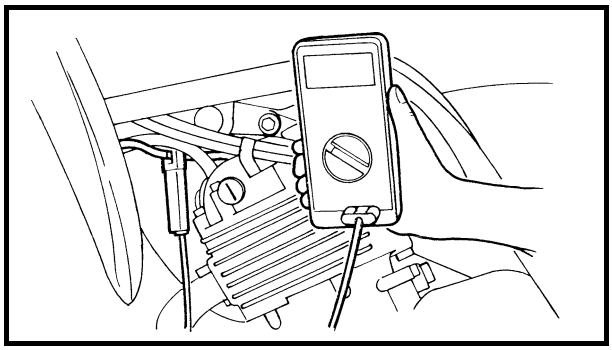

ADJUSTING THE IDLING SPEED

1. Start the engine and let it warm up for several minutes.
2. Attach:
- Tachometer

  (to the spark plug lead)
3. Check:
- Engine idling speed

  Out of specification → Adjust.

	Engine idling speed: **1,450 ~ 1,550 r/min**

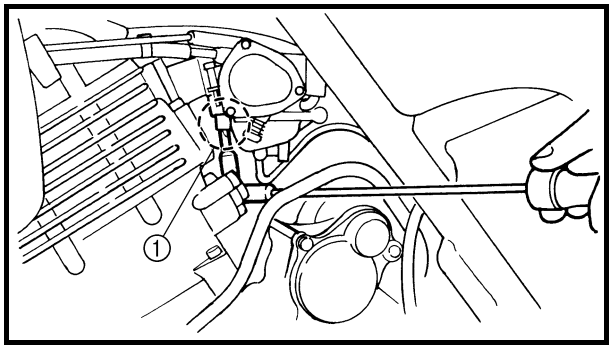

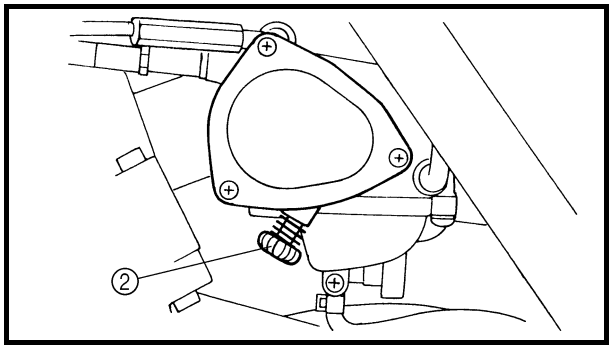

4.Adjust:
- Engine idling speed

****

Adjustment steps:
- Turn the pilot screw ① in until it is lightly seated.
- Turn the pilot screw out the specified number of turns.

	Carburetor angle driver: **P/N. 90890-03158**

	Pilot screw setting: **Carburetor #1 : 2-1/2 turns out** **Carburetor #2 : 1-1/2 turns out**

- Turn the throttle stop screw ② in or out until the specified idling speed is obtained.

Turning in	**Idling speed becomes higher.**
Turning out	**Idling speed becomes lower.**

****

5.Detach:
- Tachometer

6.Adjust:
- Throttle lever free play
  Refer to “ADJUSTING THE THROTTLE LEVER FREE PLAY”.

ADJUSTING THE THROTTLE LEVER FREE PLAY

NOTE:
Engine idling speed should be adjusted properly before adjusting the throttle lever free play.

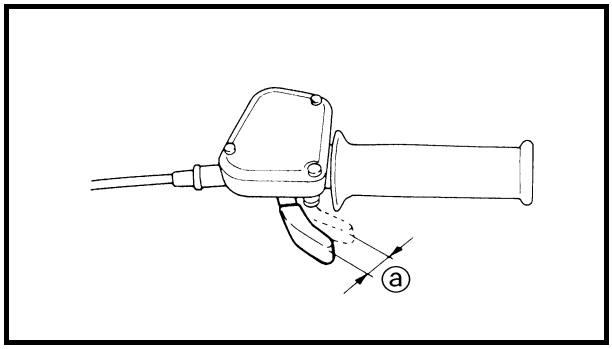

1.Check:
- Throttle lever free play ⓐ
  Out of specification → Adjust.

	Throttle lever free play: **3 ~ 5 mm (0.12 ~ 0.20 in)**

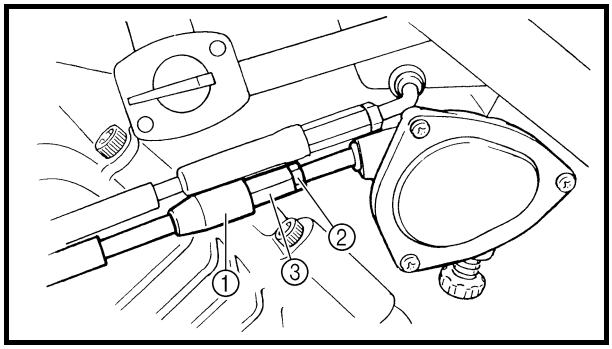

2.Adjust:
- Throttle lever free play

****

Adjustment steps:
First step:
- Pull back the adjuster cover ①.
- Loosen the locknut ② on the carburetor side.
- Turn the adjuster ③ in or out until the correct free play is obtained.

Turning in	**Free play is increased.**
Turning out	**Free play is decreased.**

- Tighten the locknut ②.
- Push in the adjuster cover ①.

NOTE:
If the free play cannot be adjusted here, adjust it at the throttle lever side of the cable.

Second step:
- Pull back the adjuster cover ④.
- Loosen the locknut ⑤.
- Turn the adjuster ⑥ in or out until the correct free play is obtained.

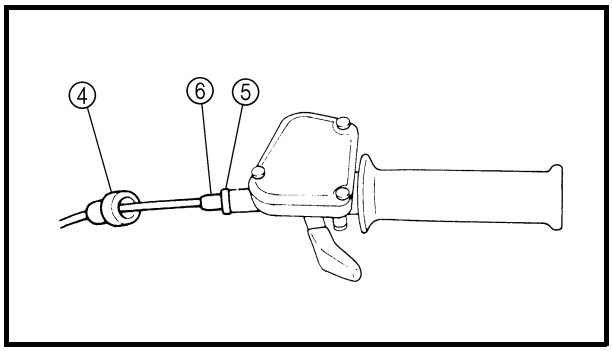

Turning in	**Free play is increased.**
Turning out	**Free play is decreased.**

- Tighten the locknut ⑤.
- Push in the adjuster cover ④.

⚠ WARNING
After adjusting the free play, turn the handlebar to the right and left to make sure that the engine idling speed does not increase.

****

ADJUSTING THE SPEED LIMITER

The speed limiter keeps the carburetor throttle from becoming fully-opened even when the throttle lever is applied to the maximum position. Screwing in the adjuster stops the engine speed from increasing.

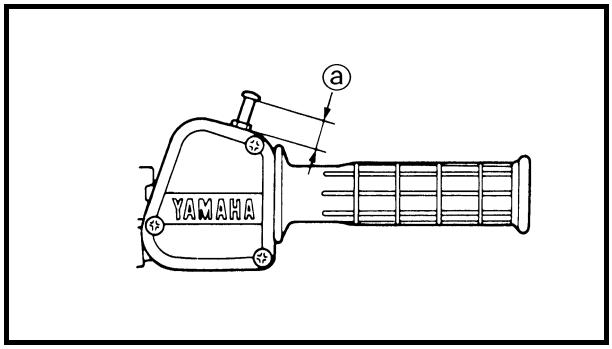

1.Check:
- Speed limiter length ⓐ
  Out of specification → Adjust.

	Speed limiter length: 12 mm (0.47 in)

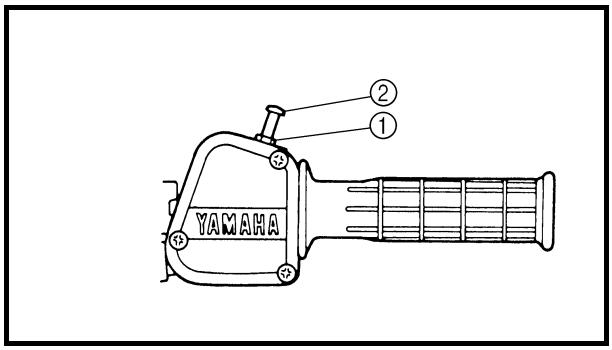

2.Adjust:
- Speed limiter length

****

Speed limiter length adjustment steps:
- Loosen the locknut ①.
- Turn the adjuster ② in or out until the specified speed limiter length is obtained.

Turning in	**Speed limiter length is decreased.**
Turning out	**Speed limiter length is increased.**

- Tighten the locknut.

⚠ WARNING
- **Particularly for a beginner rider, the speed limiter should be screwed in completely. Screw it out little by little as their riding technique improves. Never remove the speed limiter for a beginning rider.**
- **For proper throttle lever operation do not turn out the adjuster more than 12 mm (0.47 in). Also, always adjust the throttle lever free play to 3 ~ 5 mm (0.12 ~ 0.20 in).**

****

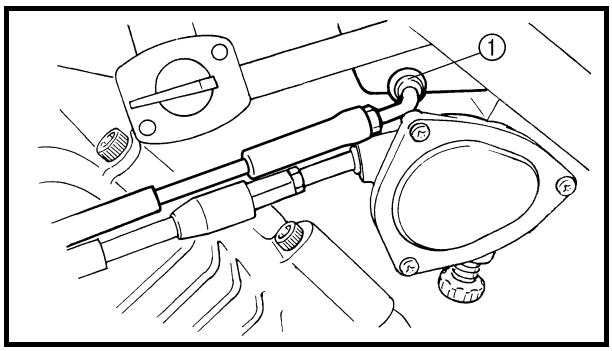

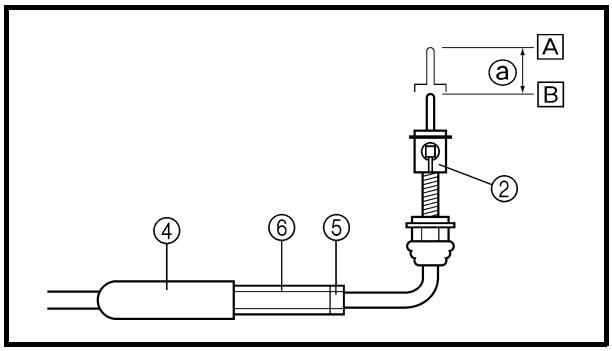

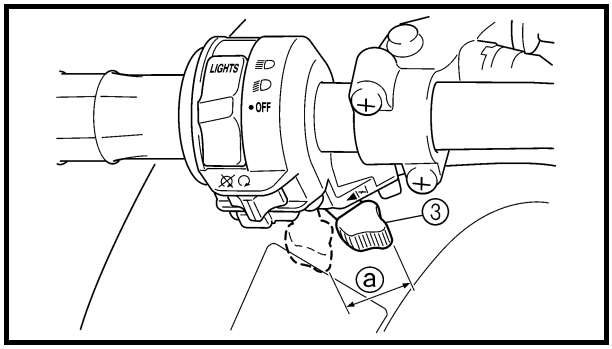

ADJUSTING THE STARTER CABLE

1.Adjust:

- Starter cable

****

Adjustment steps:

- Disconnect the starter cable ① from the carburetor body.

NOTE:

Do not remove the starter plunger ② from the starter cable.

- Measure the starter plunger stroke distance ⓐ of the starter lever ③ fully close-to-fully open position.
  If the distance is out of specification adjust it as described below.

	Starter plunger stroke distance ⓐ: 15 mm (0.59 in)

A Fully closed position
B Fully open position

- Pull back the boot ④.
- Loosen the locknut ⑤.
- Turn the adjuster ⑥ in or out until the correct distance is obtained.

Turning in	**Distance increased.**
Turning out	**Distance decreased.**

- Tighten the locknut ⑤.
- Push in the boot ④.
- Connect the starter cable.

⚠ WARNING

After adjusting the cable, turn the handlebar to right to left, and make sure that the engine idling speed does not increase.

****

CHECKING THE SPARK PLUG

1.Remove:
- Spark plug

2.Check:
- Spark plug type
  Incorrect → Replace.

Standard spark plug:
DPR8EA-9/NGK

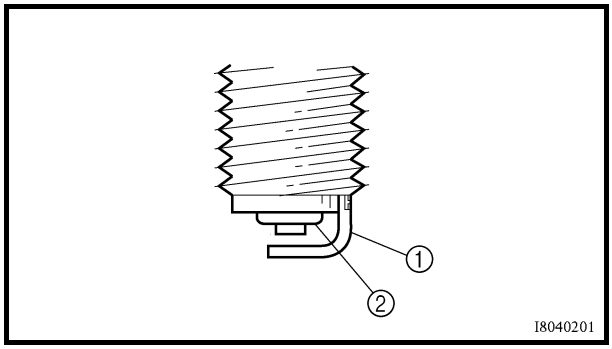

3.Check:
- Electrode ①
  Wear/damage → Replace.
- Insulator ②
  Abnormal color → Replace.
  Normal color is a medium-to-light tan color.

4.Clean the spark plug with a spark plug cleaner or wire brush.

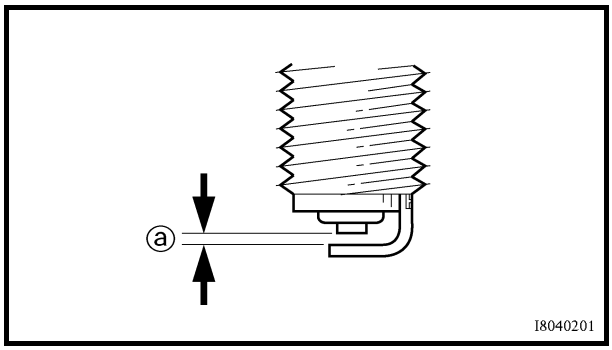

5.Measure:
- Plug gap ⓐ
  Use a wire gauge or feeler gauge.
  Out of specification → Regap.

Spark plug gap:
0.8 ~ 0.9 mm (0.031 ~ 0.035 in)

6.Tighten:
- Spark plug — **18 Nm (1.8 m • kg, 13 ft • lb)**

NOTE:
Before installing a spark plug, clean the gasket surface and plug surface.

CHECKING THE IGNITION TIMING

NOTE:
Engine idling speed and throttle cable free play should be adjusted properly before checking the ignition timing.

1.Attach:
- Tachometer
- Timing light
  (to spark plug lead)

	Timing light: **P/N. YM-33277-A, 90890-03141**

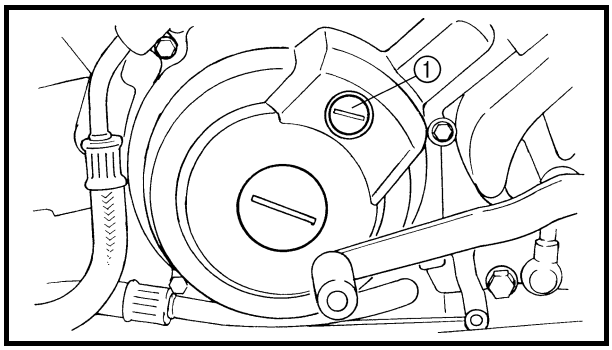

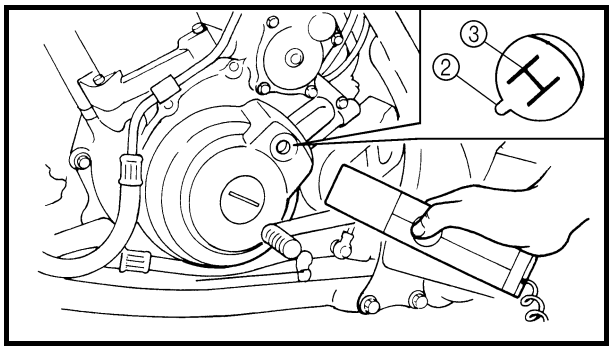

2.Check:
- Ignition timing

****

Checking steps:
- Warm up the engine and keep it at the specified speed.

	Engine speed: **1,450 ~ 1,550 r/min**

- Remove the timing mark accessing screw ①.
- Visually check the stationary pointer ② to verify it is within the required firing range ③ indicated on the flywheel.
  Incorrect firing range → Check the pulser coil assembly.
- Install the timing mark accessing screw.

****

3.Detach:
- Timing light
- Tachometer

MEASURING THE COMPRESSION PRESSURE

NOTE:
Insufficient compression pressure will result in a loss of performance.

1. Check:
- Valve clearance
  Out of specification → Adjust.
  Refer to "ADJUSTING THE VALVE CLEARANCE".
2. Start the engine and let it warm up for several minutes.
3. Stop the engine.
4. Remove:
- Spark plug

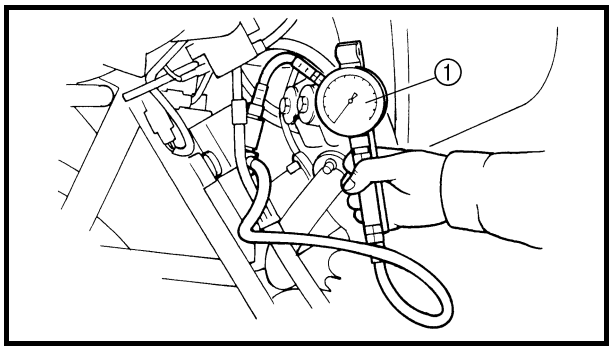

5. Attach:
- Adapter
- Compression gauge ①

Compression gauge:
P/N. YU-33223, 90890-03081
Adapter:
P/N. YU-33223-3, 90890-04082

6. Measure:
- Compression pressure
  Above the maximum pressure:
  Inspect the cylinder head, valve surfaces, and piston crown for carbon deposits.
  Below the minimum pressure:
  Squirt a few drops of oil into the affected cylinder and measure again.
- Refer to the table below.

Compression pressure (with oil introduced into cylinder)	
Reading	**Diagnosis**
Higher than without oil	**Worn or damaged piston, rings or cylinder wall.**
Same as without oil	**Defective valves or cylinder head gasket.**

Compression pressure (at sea level):
Standard:
1,250 kPa (12.5 kg/cm^2, 181 psi)
Minimum:
1,050 kPa (10.5 kg/cm^2, 149 psi)
Maximum:
1,350 kPa (13.5 kg/cm^2, 192 psi)

****

Measurement steps:

- Crank over the engine with the electric starter (be sure the battery is fully charged) with the throttle fully-open until the compression reading on the gauge stabilizes.

WARNING

When cranking the engine, ground the spark plug lead to prevent sparking.

****

7. Install:
- Spark plug **18 Nm (1.8 m • kg, 13 ft • lb)**

CHECKING THE ENGINE OIL LEVEL

1. Place the machine on a level surface.
2. Start the engine, warm it up until the engine oil has reached a normal temperature of 60 °C (140 °F), let it continue to idle for ten seconds, and then turn the engine off.

NOTE:
To achieve the proper engine oil temperature for an accurate oil level reading, the engine must have first completely cooled down, and then warmed up again for several minutes to normal operating temperature.

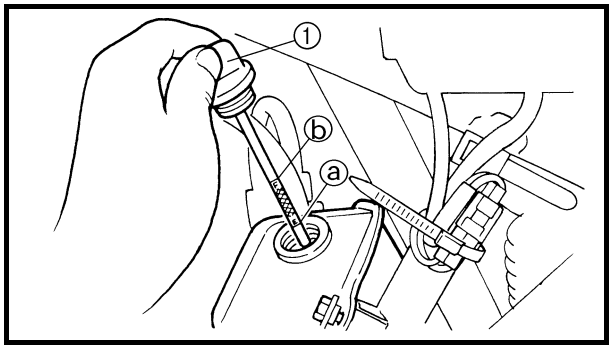

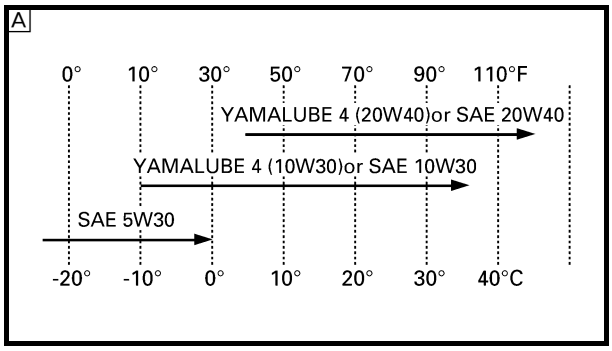

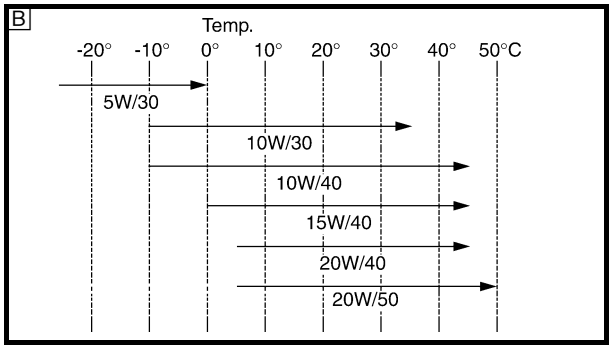

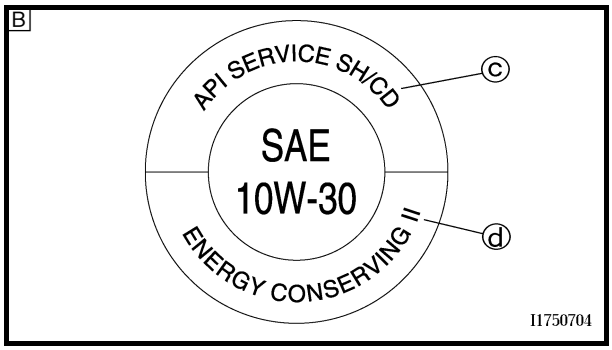

3.Check:
- Engine oil level
  Oil level should be between the minimum level mark ⓐ and the maximum level mark ⓑ.
  Low oil level → Add oil to the proper level.

NOTE:
- Wait a few minutes until the oil settles before inspecting the oil level.
- Do not screw the dipstick ① in when inspecting the oil level.

Recommended oil:
Follow the left chart.

NOTE:
Recommended oil classification:
API Service “SE”, “SF”, “SG” type or equivalent (e.g. “SF–SE–CC”, “SF–SE–SD” etc.)

CAUTION:
- **Engine oil also lubricates the clutch and the wrong oil types or additives could cause clutch slippage. There-fore, do not add any chemical additives or use engine oils with a grade of CD ⓒ or higher and do not use oils labeled “ENERGY CONSERVING II” ⓓ or higher.**
- **Do not add any chemical additives. Engine oil also lubricates the clutch and additives could cause clutch slippage.**
- **Do not allow foreign material to enter the crankcase.**

A For CDN
B For Europe

4.Start the engine and let it warm up for several minutes.
5.Stop the engine and inspect the oil level again.

NOTE:
Wait a few minutes until the oil settles before inspecting the oil level.

CHANGING THE ENGINE OIL

1. Remove:
- Engine skid plate
  Refer to “SEAT, FENDERS AND FUEL TANK”.
2. Start the engine and let it warm up for several minutes.
3. Stop the engine and place a container under the engine oil drain bolt.

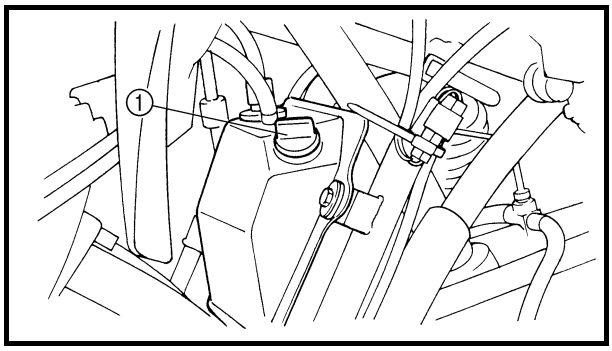

4. Remove:
- Dipstick ①

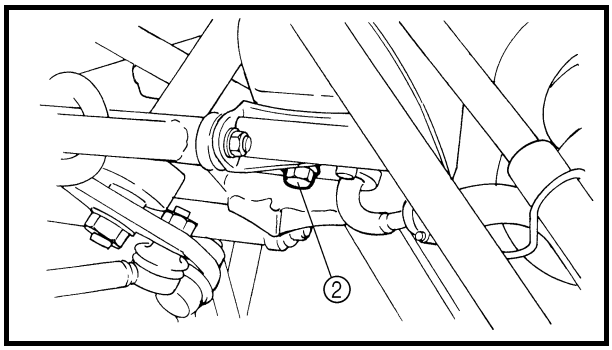

- Engine oil drain bolt (oil tank) ②

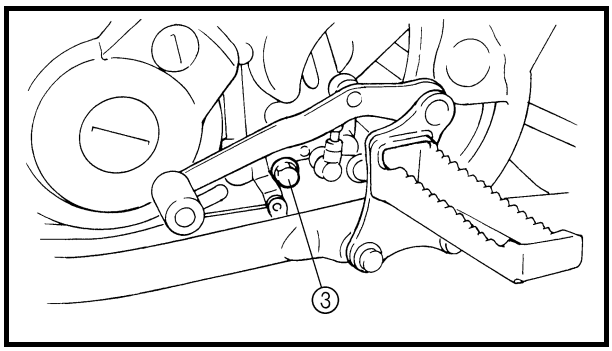

- Engine oil drain bolt (crankcase) ③
  Drain the engine oil from the oil tank and crankcase.

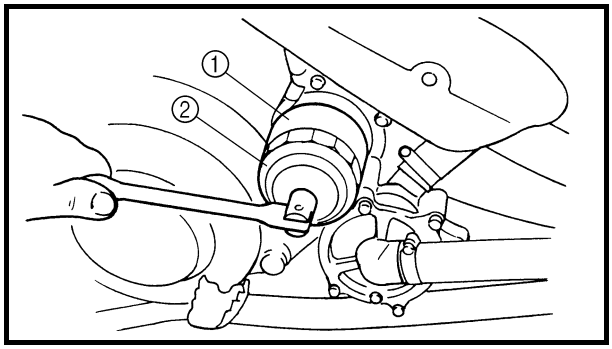

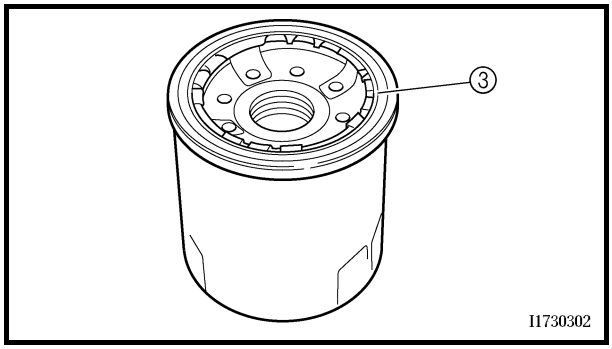

5.If the oil filter cartridge is also to be replaced, perform the following procedure.

****

Replacement steps:

- Remove the oil filter cartridge ① with an oil filter wrench ②.

	Oil filter wrench: **P/N. YM-01469, 90890-01469**

- Apply a thin coat of engine oil to the O-ring ③ of the new oil filter cartridge.

CAUTION:

Make sure that the O-ring ③ is properly seated in the groove of the oil filter cartridge.

- Tighten the new oil filter cartridge to specification with an oil filter wrench.

	Oil filter cartridge: **17 Nm (1.7 m • kg, 12 ft • lb)**

****

6.Install:

- Engine oil drain bolt (crankcase)

30 Nm (3.0 m • kg, 22 ft • lb)

- Engine oil drain bolt (oil tank)

25 Nm (2.5 m • kg, 18 ft • lb)

7.Fill:

- Oil tank
  (with the specified amount of the recommended engine oil)

	Quantity: **Total amount:** **2.3 L (2.02 Imp qt, 2.43 US qt)** **Periodic oil replacement:** **1.9 L (1.67 Imp qt, 2.01 US qt)** **With oil filter cartridge replacement:** **1.95 L (1.72 Imp qt, 2.06 US qt)**

NOTE:

- Pour the engine oil in several stages.
- First, pour in 1.75 L (1.54 Imp qt, 1.85 US qt) of oil, and then start the engine and rev it 3 to 5 times. Stop the engine, and then pour in the remainder of the specified amount.

CAUTION:

When starting the engine make sure the dipstick is securely fitted into the oil tank.

8.Install:
- Dipstick

9.Warm up the engine for a few minutes, then stop the engine.

10.Check:
- Engine
  (for engine oil leaks)
- Oil level
  Refer to “CHECKING THE ENGINE OIL LEVEL”.

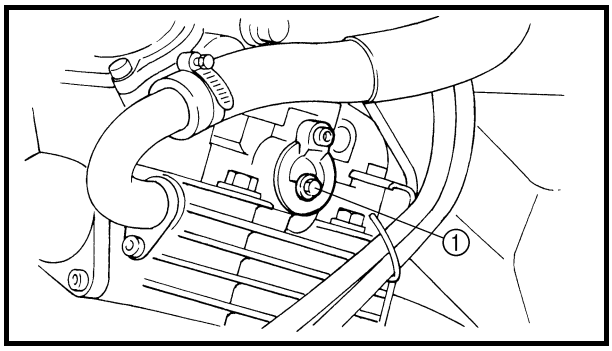

11.Check:
- Engine oil pressure

****
- Slightly loosen the oil gallery bolt ①.
- Start the engine and keep it idling until engine oil starts to seep from the oil gallery bolt. If no engine oil comes out after one minute, turn the engine off so that it will not seize.
- Check the engine oil passages, the oil filter cartridge and the oil pump for damage or leakage.
  Refer to “OIL PUMP” in CHAPTER 5.
- Start the engine after solving the problem(s) and check the engine oil pressure again.
- Tighten the oil gallery bolt to specification.

	**Oil gallery bolt:** **7 Nm (0.7 m • kg, 5.1 ft • lb)**

****

12.Install:
- Engine skid plate
  Refer to “SEAT, FENDERS AND FUEL TANK”.

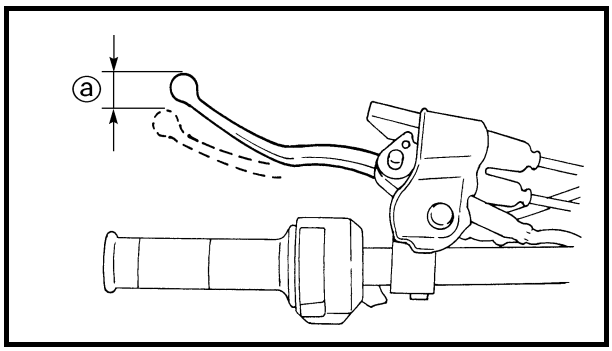

ADJUSTING THE CLUTCH CABLE

1.Check:

- Clutch lever free play ⓐ
  Out of specification → Adjust.

Clutch lever free play
(at the clutch lever end):
5 ~ 10 mm (0.20 ~ 0.39 in)

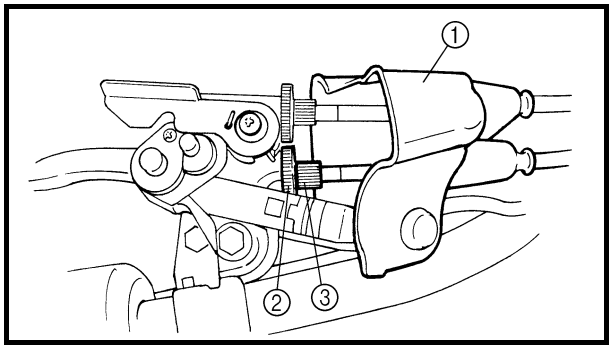

2.Adjust:

- Clutch lever free play

****

Adjustment steps:

- Pull the rubber cover ① off.
- Loosen the locknut ② and finger tighten the adjusting bolt ③.
- Loosen the locknut ④.
- Turn the adjusting nut ⑤ until the clutch lever free play is within the specified limits.

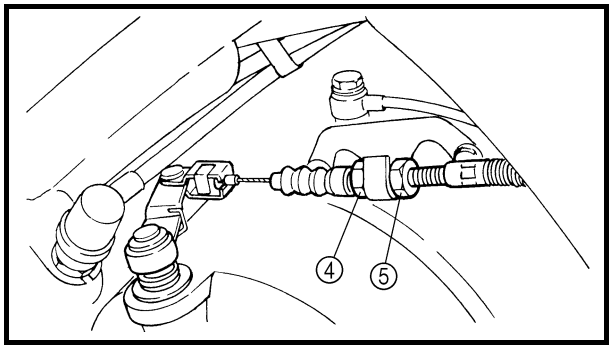

Clutch lever free play
(at the clutch lever end):
5 ~ 10 mm (0.20 ~ 0.39 in)

- Tighten the locknut ④.

NOTE:
If the specified clutch lever free play cannot be obtained on it, use the adjusting bolt ③.

- Turn the adjusting bolt ③ until the clutch lever free play is within the specified limits.
- Tighten the locknut ②.
- Pull the rubber cover ① in.

****

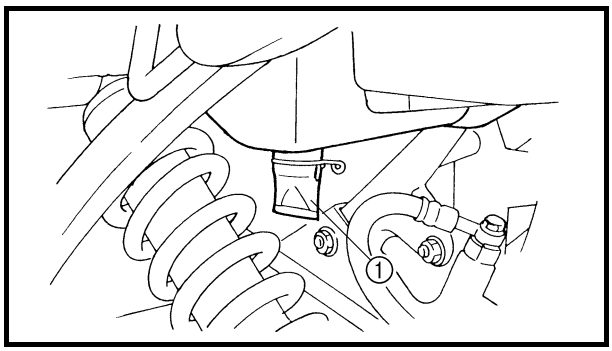

CLEANING THE AIR FILTER

NOTE:
There is a check hose ① at the bottom of the air filter case. If dust and/or water collects in this hose, clean the air filter element and air filter case.

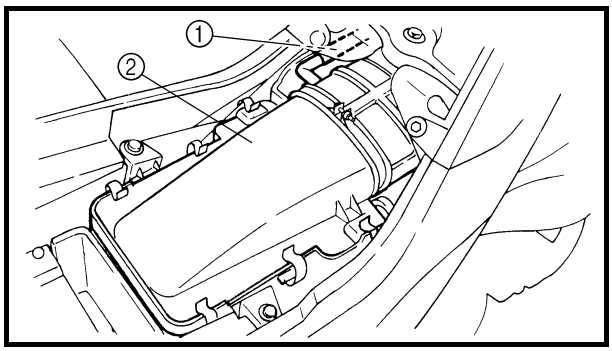

1.Remove:
- Seat
  Refer to “SEAT, FENDERS AND FUEL TANK”.

2.Disconnect:
- Crankcase breather hose ①

3.Remove:
- Air filter case cover ②

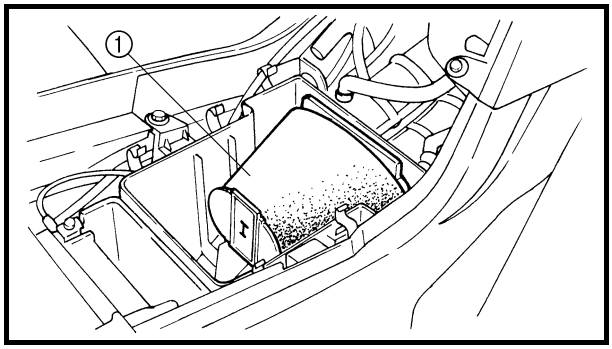

4.Remove:
- Air filter element assembly ①
- Air filter element cap ②
- Air filter element ③

NOTE:
When removing the air filter element, rotate the air filter element cap 1/4 of a turn and remove the element.

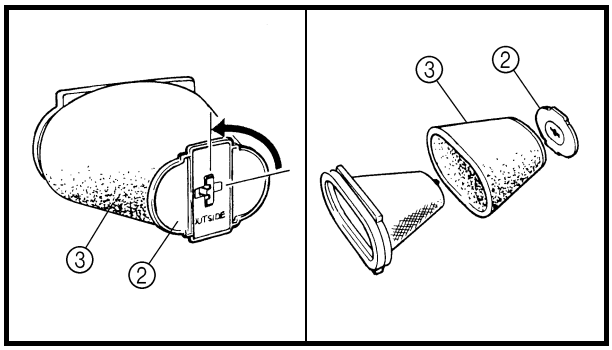

CAUTION:
Never operate the engine with the air filter element removed. This will allow unfiltered air to enter, causing rapid wear and possible engine damage. Additionally, operation without the filter element will affect carburetor tuning with subsequent poor performance and possible engine overheating.

5.Check:
- Air filter element
  Damaged → Replace.

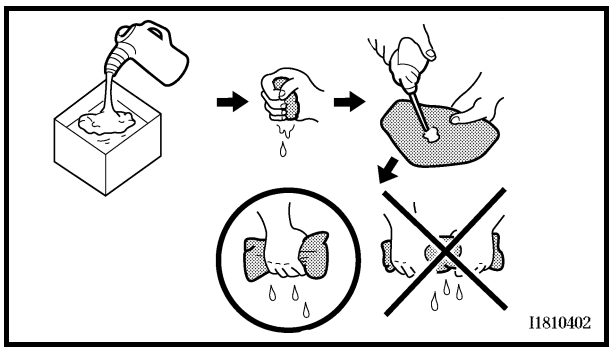

6.Clean:
- Air filter element

****

Cleaning steps:
- Wash the element gently, but thoroughly in solvent.

⚠ WARNING

Use a cleaning solvent which is designed to clean parts only. Never use gasoline or low flash point solvents as they may cause a fire or explosion.

- Squeeze the excess solvent out of the element and let it dry.

CAUTION:

Do not twist or wring out the element. This could damage the foam material.

- Apply engine oil to the element.
- Squeeze out the excess oil.

NOTE:
The element should be wet but not dripping.

****

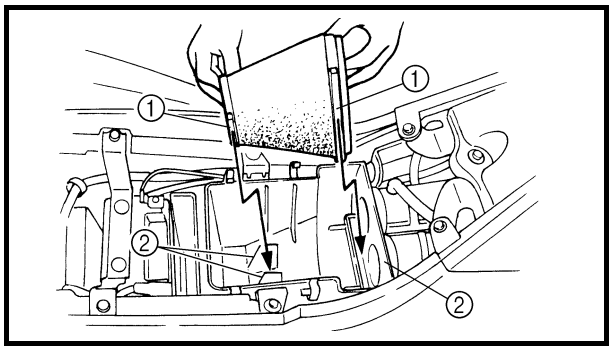

7.Install:
- Air filter element
- Air filter case cover

NOTE:
- Insert the lobes ① on the filter element into the receptacles ② on the filter case.
- To prevent air leaks make sure that the sealing surface of the element matches the sealing surface of the case.

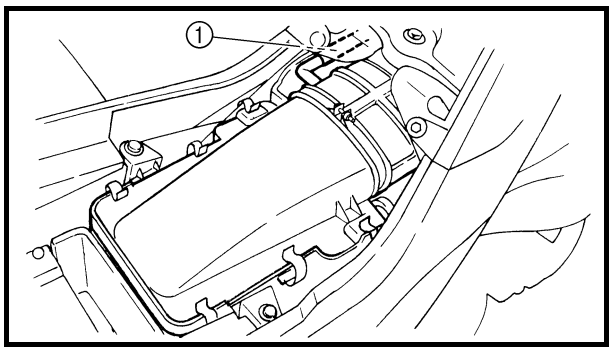

8.Connect:
- Crankcase breather hose ①

9.Install:
- Seat
  Refer to “SEAT, FENDERS AND FUEL TANK”.

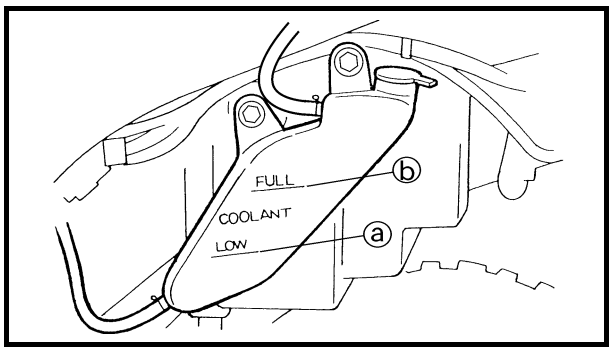

CHECKING THE COOLANT LEVEL

1.Place the machine on a level surface.
2.Check:
- Coolant level
  The coolant level should be between the minimum level mark ⓐ and maximum level mark ⓑ.
  Below the minimum level mark → Add the recommended coolant to the proper level.

CAUTION:

- **Adding water instead of coolant lowers the antifreeze content of the coolant. If water is used instead of coolant, check and if necessary, correct the antifreeze concentration of the coolant.**
- **Use only distilled water. However, soft water may be used if distilled water is not available.**

3.Start the engine, warm it up for several minutes, and then turn it off.
4.Check:
- Coolant level

NOTE:
Before inspecting the coolant level, wait a few minutes until the coolant has settled.

CHANGING THE COOLANT

1.Remove:
- Front panel
  Refer to “SEAT, FENDERS AND FUEL TANK”.

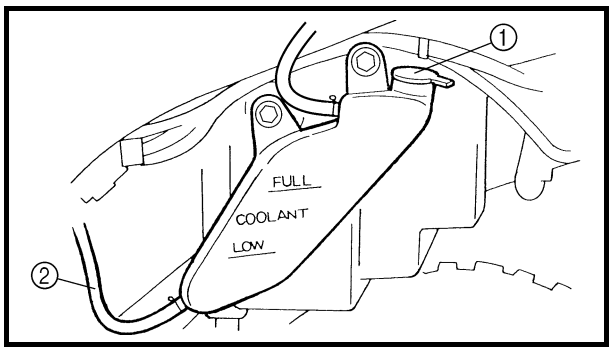

2.Remove:
- Coolant reservoir cap ①
3.Disconnect:
- Coolant reservoir hose ②

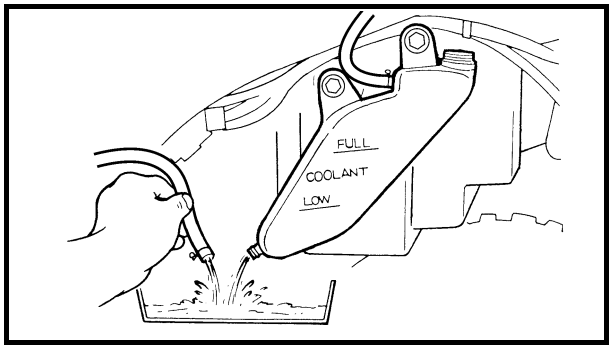

4.Drain:
- Coolant
  (from the coolant reservoir)

5.Connect:
- Coolant reservoir hose

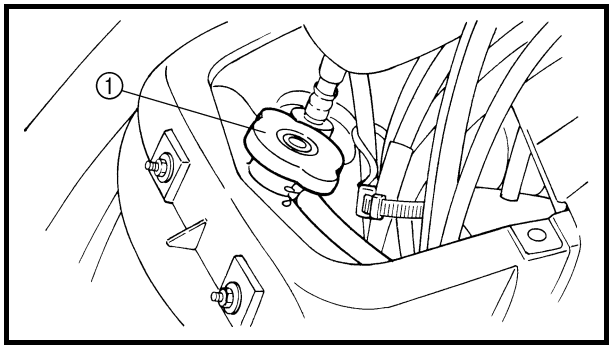

6.Remove:
- Radiator cap ①

⚠ WARNING

A hot radiator is under pressure. Therefore, do not remove the radiator cap when the engine is hot. Scalding hot fluid and steam may be blown out, which could cause serious injury. When the engine has cooled, open the radiator cap as follows:
Place a thick rag or a towel over the radiator cap and slowly turn the radiator cap counterclockwise toward the detent to allow any residual pressure to escape. When the hissing sound has stopped, turn the radiator cap counterclockwise while pressing down on it and then remove it.

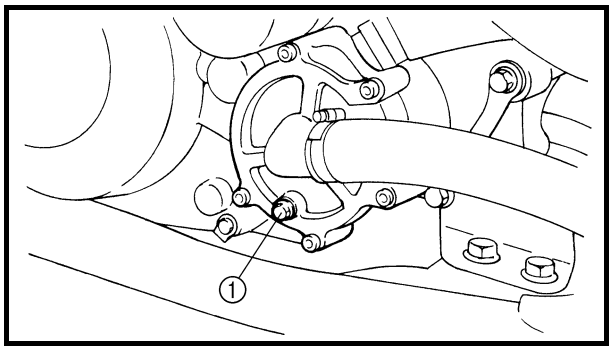

7.Remove:
- Coolant drain bolt ①
  (along with the copper washer)

8.Drain:
- Coolant

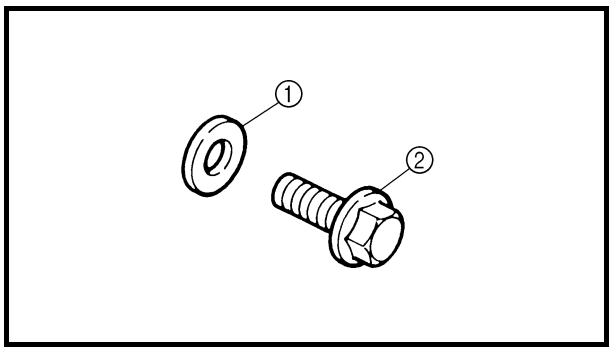

9.Check:
- Copper washer ① New
- Coolant drain bolt ②
  Damage → Replace.

10.Install:
- Coolant drain bolt

	10 Nm (1.0 m • kg, 7.2 ft • lb)

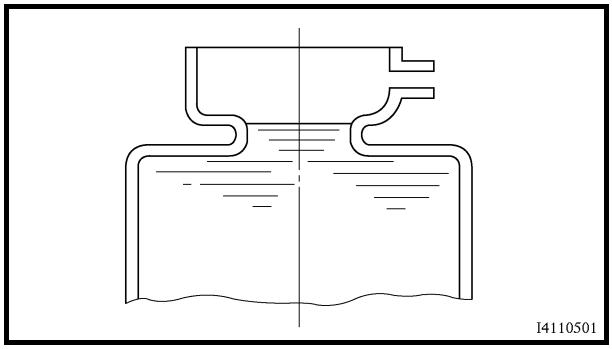

11.Fill:
- Cooling system
  (with the specified amount of the recommended coolant)

Recommended antifreeze:
High-quality ethylene glycol antifreeze containing corrosion inhibitors for aluminum engines
Mixing ratio:
1:1 (antifreeze:water)
Quantity:
Total amount:
1.3 L
(1.14 Imp qt, 1.37 US qt)
Coolant reservoir capacity:
0.29 L
(0.26 Imp qt, 0.31 US qt)

Handling notes for coolant
Coolant is potentially harmful and should be handled with special care.

WARNING
- **If coolant splashes in your eyes, thoroughly wash them with water and consult a doctor.**
- **If coolant splashes on your clothes, quickly wash it away with water and then with soap and water.**
- **If coolant is swallowed, induce vomiting and get immediate medical attention.**

CAUTION:
- **Adding water instead of coolant lowers the antifreeze content of the coolant. If water is used instead of coolant, check, and if necessary, correct the antifreeze concentration of the coolant.**
- **Use only distilled water. However, soft water may be used if distilled water is not available.**
- **If coolant comes into contact with painted surfaces, immediately wash them with water.**
- **Do not mix different types of antifreeze.**

12.Install:
- Radiator cap

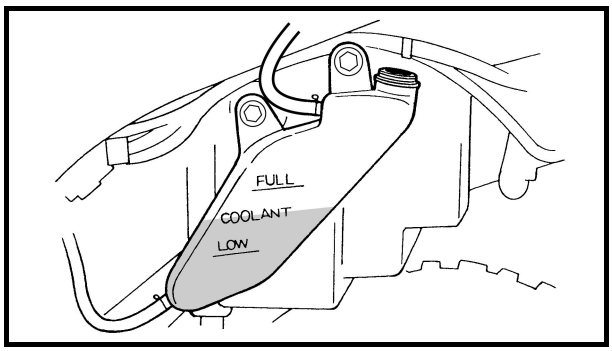

13.Fill:
- Coolant reservoir
  (with the recommended coolant to the proper level)

14.Install:
- Coolant reservoir cap

15.Start the engine, warm it up for several minutes, and then turn it off.

16.Check:
- Coolant level
  Refer to “CHECKING THE COOLANT LEVEL”.

NOTE:
Before inspecting the coolant level, wait a few minutes until the coolant has settled.

17.Install:
- Front panel
  Refer to “SEAT, FENDERS AND FUEL TANK”.

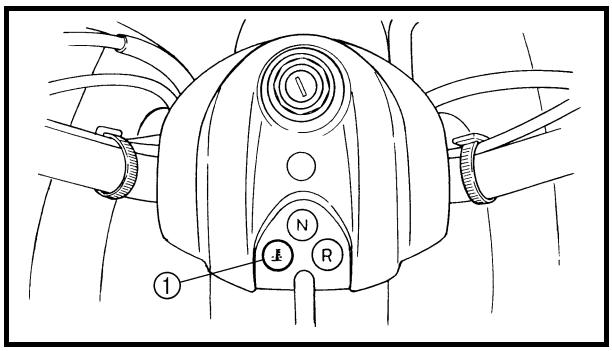

CHECKING THE COOLANT TEMPERATURE WARNING LIGHT

① Coolant temperature warning light

Coolant temperature warning light checking method

- Turn the main switch "ON" and the engine stop switch to "❍".
  - Coolant temperature warning light does not come on.
    - Push start switch with transmission in "neutral".
      - Coolant temperature warning light comes on momentarily. → Coolant temperature and electrical circuit are OK. Go ahead with riding.
      - Coolant temperature warning light does not come on. → Ask a Yamaha dealer to inspect the electrical circuit.
  - Coolant temperature warning light come on. → Ask a Yamaha dealer to inspect the electrical circuit.

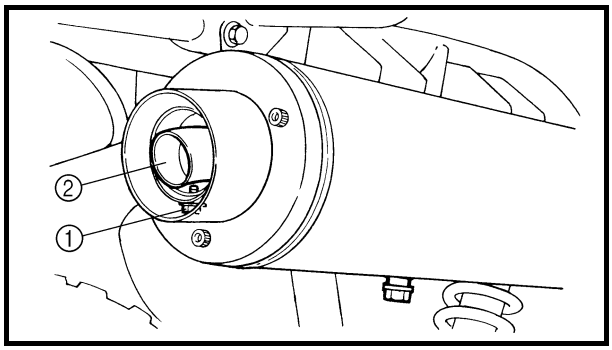

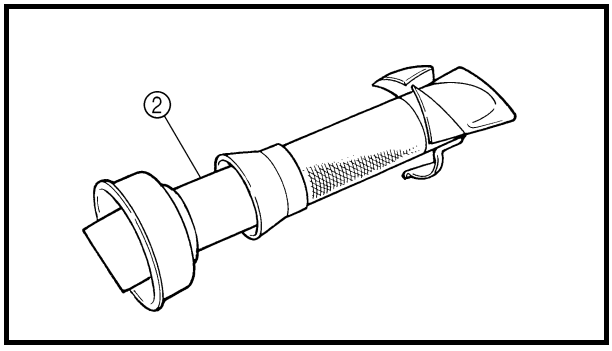

CLEANING THE SPARK ARRESTER

1.Clean:

- Spark arrester

****

Cleaning steps:

⚠ WARNING

- **Select a well-ventilated area free of combustible materials.**
- **Always let the exhaust system cool before performing this operation.**
- **Do not start the engine when removing the tailpipe from the muffler.**

- Remove the bolt ①.
- Remove the tailpipe ② by pulling it out of the muffler.

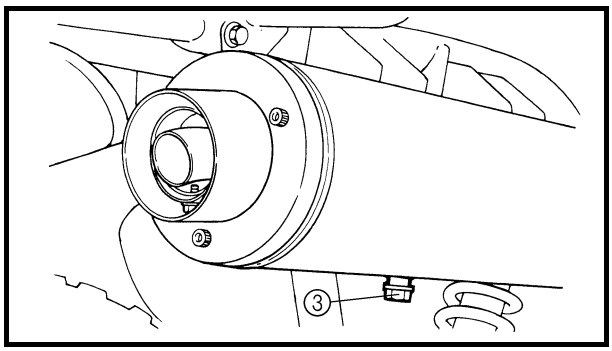

- Tap the tailpipe lightly with a soft-face hammer or suitable tool, then use a wire brush to remove any carbon deposits from the spark arrester portion of the tailpipe and the inner contact surfaces of the muffler.
- Insert the tailpipe into the muffler and align the bolt holes.
- Insert the bolt and tighten it.
- Remove the purging bolt ③.
- Start the engine and rev it up approximately twenty times while momentarily creating exhaust system back pressure by blocking the end of the muffler with a shop towel.
- Stop the engine and allow the exhaust pipe to cool.
- Install the purging bolt ③ and tighten it.

****

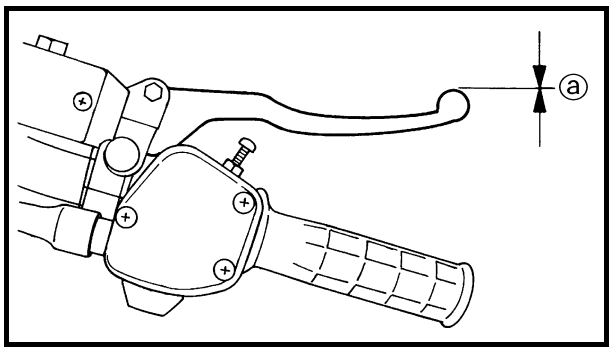

CHASSIS

ADJUSTING THE FRONT BRAKE

1.Check:

- Brake lever free play ⓐ
  Out of specification → Bleed the front brake system.
  Refer to “AIR BLEEDING (HYDRAULIC BRAKE SYSTEM)”.

Brake lever free play (at the brake lever end):
0 mm (0 in)

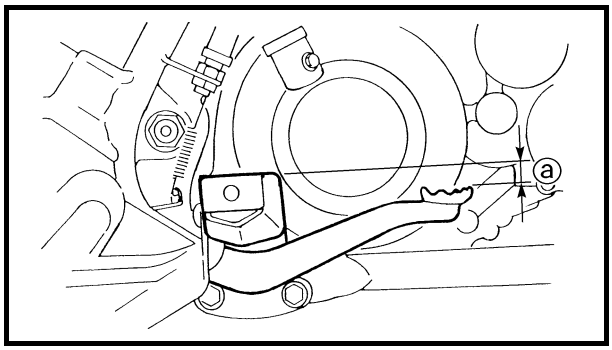

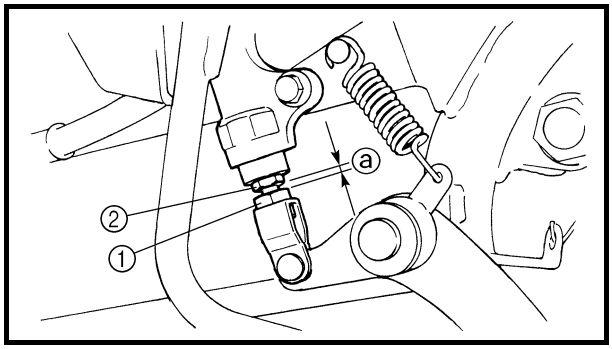

ADJUSTING THE REAR BRAKE

1.Check:

- Rear brake pedal height ⓐ
  Out of specification → Adjust.

Rear brake pedal height:
4 mm (0.16 in)

2.Adjust:

- Rear brake pedal height

****

Adjustment steps:

- Loosen the locknut ①.
- Turn the adjusting bolt ② until the brake pedal height is within the specified limits.

Brake pedal height:
4 mm (0.16 in)

- Tighten the locknut ①.

NOTE:
When adjusting the brake pedal height make sure the locknut-to-adjusting bolt clearance ⓐ does not exceed 2.2 ~ 3.2 mm (0.09 ~ 0.13 in).

⚠ WARNING

After this adjustment is performed, lift the rear wheels off the ground by placing a block under the engine, and spin the rear wheels to ensure there is no brake drag. If any brake drag is noticed perform the above steps again.

****

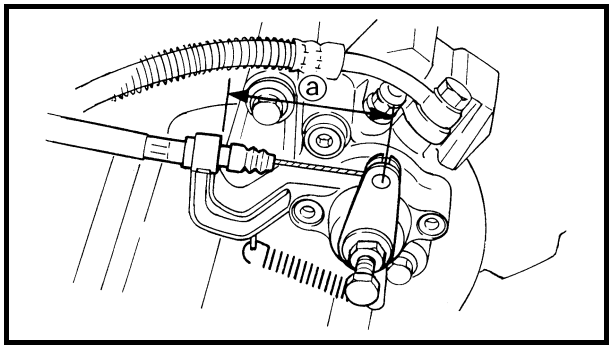

ADJUSTING THE PARKING BRAKE

1.Check:

- Parking brake cable end length ⓐ
  Out of specification → Adjust.

Parking brake cable end length:
64 ~ 68 mm (2.5 ~ 2.7 in)

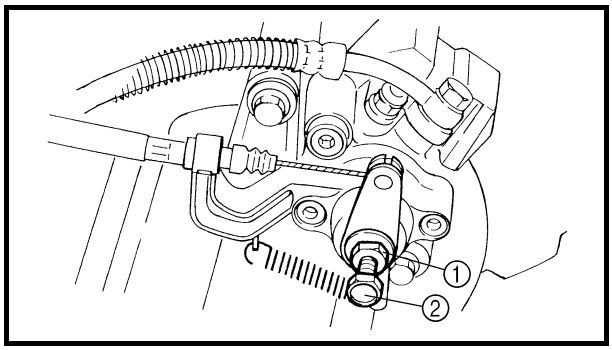

2.Adjust:

- Parking brake cable end length

****

Adjustment steps:

- Loosen the locknut ① and adjusting bolt ②.
- Pull the rubber cover ③ off.
- Loosen the locknut ④.
- Turn the adjuster ⑤ in or out until the specified brake cable end length is obtained.
- Tighten the locknut ④.
- Slowly turn the adjusting bolt ② clockwise until resistance is felt.
- Turn it 1/8 counterclockwise.
- Tighten the locknut ①.

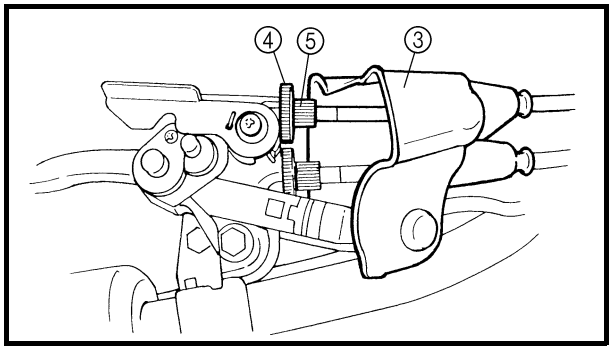

Locknut:
16 Nm (1.6 m • kg, 11 ft • lb)

- Check the parking brake cable free play ⓐ.

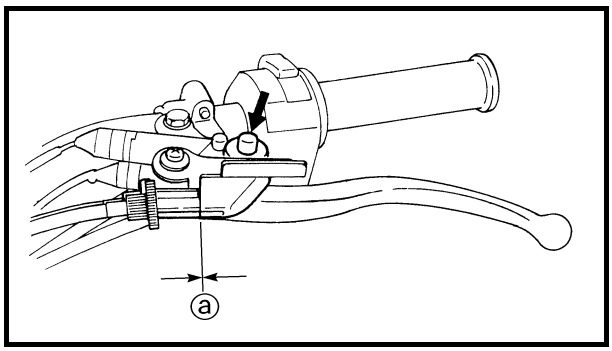

Free play (parking brake cable):
0 mm (0 in)
at parking brake lever pivot

- If the free play is incorrect, adjust the free play by adjuster ⑤.
- Pull the rubber cover ③ in.

WARNING

After this adjustment is performed, lift the rear wheels off the ground by placing a block under the engine, and spin the rear wheels to ensure there is no brake drag. If any brake drag is noticed perform the above steps again.

****

CHECKING THE BRAKE FLUID LEVEL

1.Place the machine on a level surface.

NOTE:

When inspecting the brake fluid level, make sure that the top of the brake fluid reservoir top is horizontal.

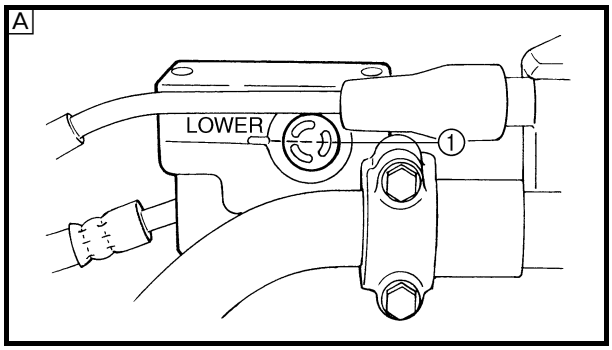

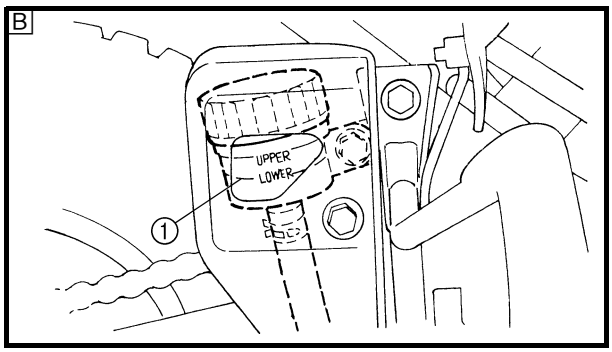

2.Check:

- Brake fluid level
  Fluid level is below the “LOWER” level line ① → Add the recommended brake fluid to the proper level.

	Recommended brake fluid: DOT 4

A Front brake
B Rear brake

CAUTION:

Brake fluid may erode painted surfaces or plastic parts. Always clean up spilled fluid immediately.

WARNING

- **Use only the designated quality brake fluid: Otherwise, the rubber seals may deteriorate, causing leakage and poor brake performance.**
- **Refill with the same type of brake fluid: Mixing fluids may result in a harmful chemical reaction and lead to poor performance.**
- **Be careful that water does not enter the master cylinder when refilling. Water will significantly lower the boiling point of the fluid and may result in a vapor lock.**

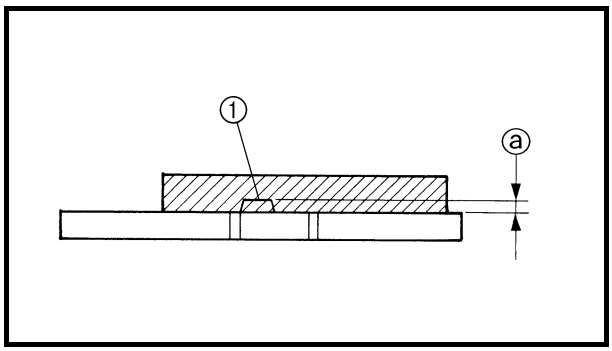

CHECKING THE FRONT BRAKE PAD

1.Remove:
- Front wheels

2.Check:
- Brake pad
  Wear indicators ① almost in contact with the brake disc → Replace the brake pads as a set.
  Refer to “FRONT AND REAR BRAKES” in CHAPTER 4.

Brake pad wear limit ⓐ:
1 mm (0.04 in)

3.Operate the brake lever.
4.Install:
- Front wheels

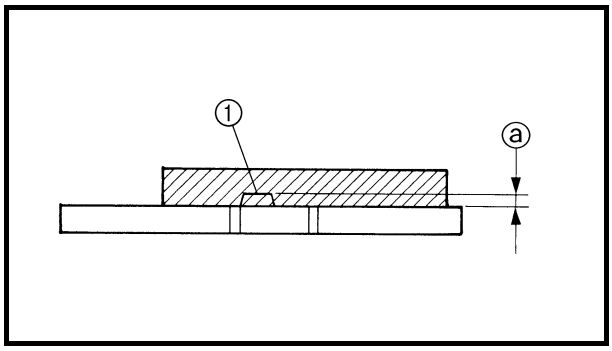

CHECKING THE REAR BRAKE PAD

1.Check:
- Brake pad
  Wear indicators ① almost in contact with the brake disc → Replace the brake pads as a set.
  Refer to “FRONT AND REAR BRAKES” in CHAPTER 4.

Brake pad wear limit ⓐ:
1 mm (0.04 in)

2.Operate the brake pedal.

ADJUSTING THE REAR BRAKE LIGHT SWITCH

NOTE:
The rear brake light switch is operated by movement of the brake pedal.
The rear brake light switch is properly adjusted when the brake light comes on just before the braking effect starts.

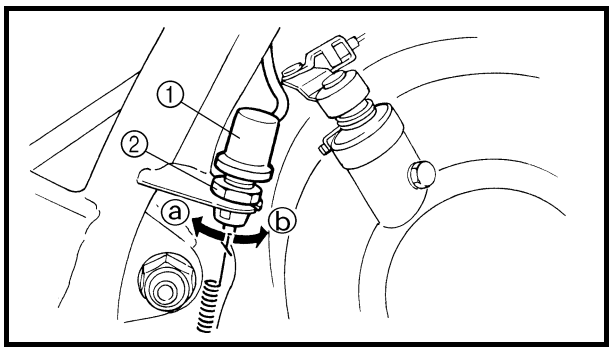

1.Check:
- Rear brake light operation timing
  Incorrect → Adjust.

2.Adjust:
- Rear brake light operation timing

****

- Hold the main body ① of the rear brake light switch so that it does not rotate and turn the adjusting nut ② in direction ⓐ or ⓑ until the rear brake light comes on at the proper time.

Direction ⓐ	**Brake light comes on sooner.**
Direction ⓑ	**Brake light comes on later.**

****

CHECKING THE BRAKE HOSE

1.Remove:
- Seat
- Front fender
  Refer to “SEAT, FENDERS AND FUEL TANK”.

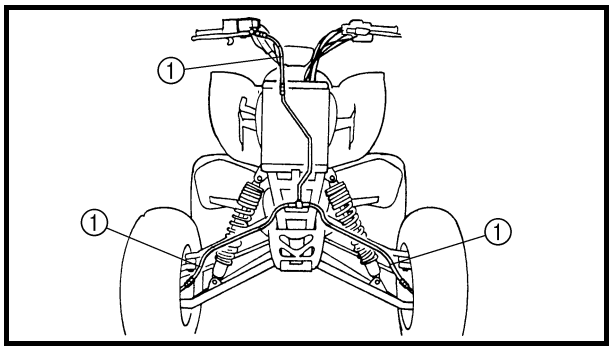

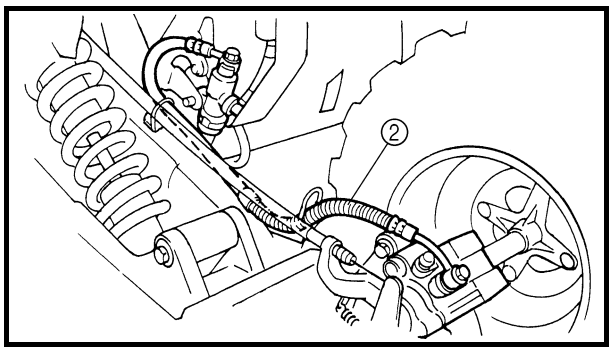

2.Check:
- Front brake hoses ①
- Rear brake hoses ②
  Cracks/wear/damage → Replace.

3.Check:
- Brake hose clamp
  Loosen → Tighten.

4.Hold the machine in an upright position and apply the front or rear brake.

5.Check:
- Brake hoses
  Apply the brake lever several times.
  Fluid leakage → Replace the hose.
  Refer to “FRONT AND REAR BRAKE” in CHAPTER 4.

6.Install:
- Front fender
- Seat

  Refer to “SEAT, FENDERS AND FUEL TANK”.

BLEEDING THE HYDRAULIC BRAKE SYSTEM

⚠ WARNING

Bleed the brake system if:
- **The system has been disassembled.**
- **A brake hose or brake pipe have been loosened or removed.**
- **The brake fluid has been very low.**
- **The brake operation has been faulty.**

A loss of braking performance may occur if the brake system is not properly bled.

1.Bleed:
- Brake system

****

Air bleeding steps:

a. Add the proper brake fluid to the reservoir.
b. Install the diaphragm. Be careful not to spill any fluid or allow the reservoir to overflow.
c. Connect the clear plastic hose ① tightly to the caliper bleed screw ②.

A Front
B Rear

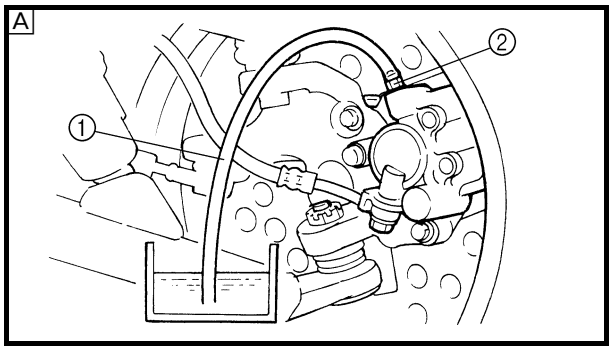

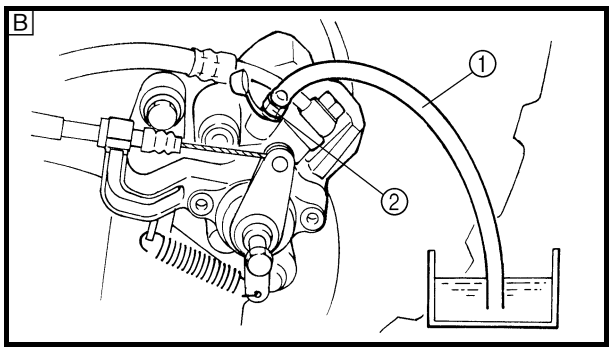

d. Place the other end of the hose into a container.
e. Slowly apply the brake lever or pedal several times.
f. Pull the lever in or push down on the pedal and hold it.
g. Loosen the bleed screw and allow the lever or pedal to travel towards its limit.
h. Tighten the bleed screw when the lever or pedal limit has been reached, then release the lever or pedal.
i. Repeat steps (e) to (h) until all the air bubbles have disappeared from the fluid.

j. Tighten the bleed screw.

	Bleed screw: **6 Nm (0.6 m • kg, 4.3 ft • lb)**

NOTE:
If bleeding is difficult, it may be necessary to let the brake fluid settle for a few hours. Repeat the bleeding procedure when the tiny bubbles in the system have disappeared.

k. Add brake fluid to the proper level.
Refer to "CHECKING THE BRAKE FLUID LEVEL".

⚠ WARNING
Check the operation of the brake after bleeding the brake system.

****

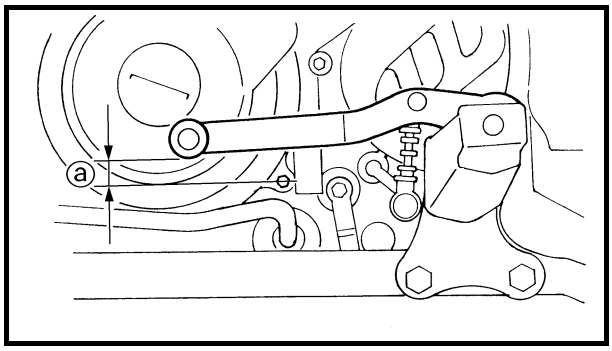

ADJUSTING THE SHIFT PEDAL

1.Check:
- Shift pedal height ⓐ
  Out of specification → Adjust.

	Shift pedal height: **22 mm (0.89 in)**

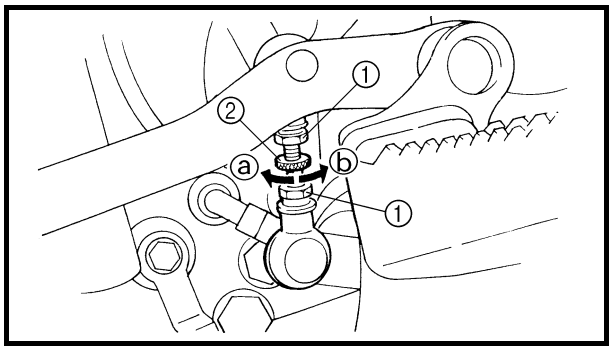

2.Adjust:
- Shift pedal height

****

Adjustment steps:
- Loosen the locknuts ①.
- Turn the adjusting rod ② in direction ⓐ or ⓑ until the specified shift pedal position obtained.

Direction ⓐ	**Shift pedal position is down.**
Direction ⓑ	**Shift pedal position is up.**

- Tighten the locknuts.

	Locknut: **8 Nm (0.8 m • kg, 5.8 ft • lb)**

****

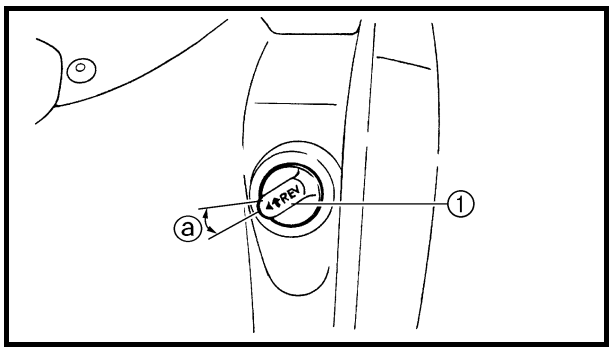

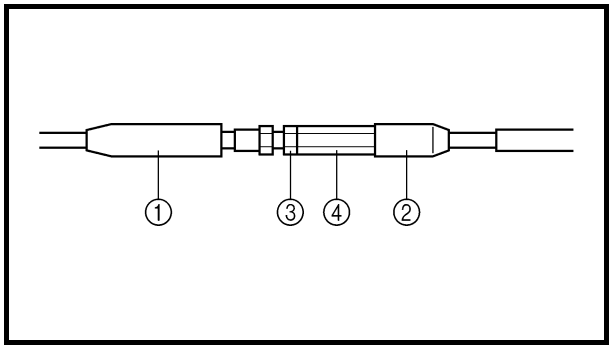

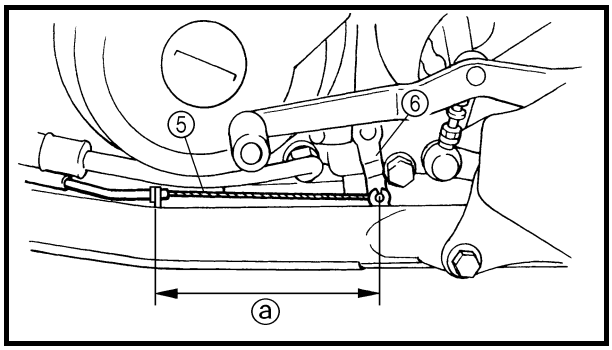

ADJUSTING THE REVERSE CONTROL CABLE

1.Check:

- Reverse knob free play ⓐ
  Out of specification → Adjust.

Reverse knob free play:
0 mm (0 in)

2.Adjust:

****

Adjustment steps:

- Pull the boots ① and ② off.
- Loosen the locknut ③.
- Turn the adjusting nut ④ until the reverse control cable ⑤ is taut or the length ⓐ is 135 mm (5.31 in).

NOTE:
Be sure to hold the reverse shift lever ⑥ when make this adjustment so that it does not move.

- Tighten the locknut ③.
- Pull the boots ① and ② in.

****

ADJUSTING THE DRIVE CHAIN SLACK

NOTE:
The drive chain slack must be checked at the tightest point on the chain.

CAUTION:
A drive chain that is too tight will overload the engine and other vital parts, and one that is too loose can skip and damage the swingarm or cause an accident. Therefore, keep the drive chain slack within the specified limits.

1.Elevate the rear wheels by placing the suitable stand under the frame.
2.Rotate the rear wheel several times and check the drive chain to locate its tightest point.

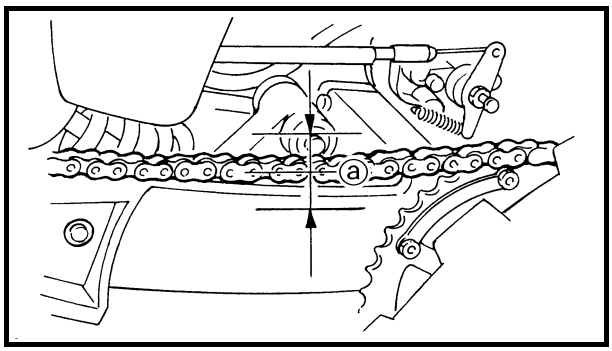

3.Measure:
- Drive chain slack ⓐ
  Out of specification → Adjust.

	Drive chain slack: **30 ~ 45 mm (1.18 ~ 1.77 in)**

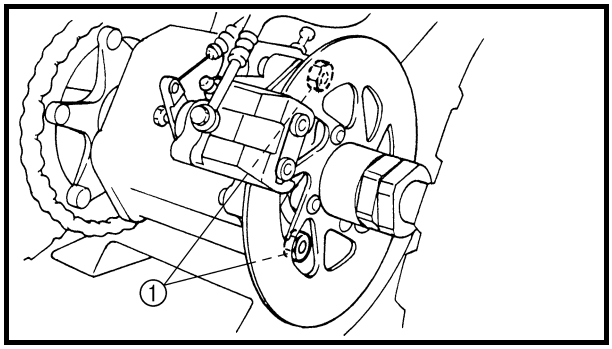

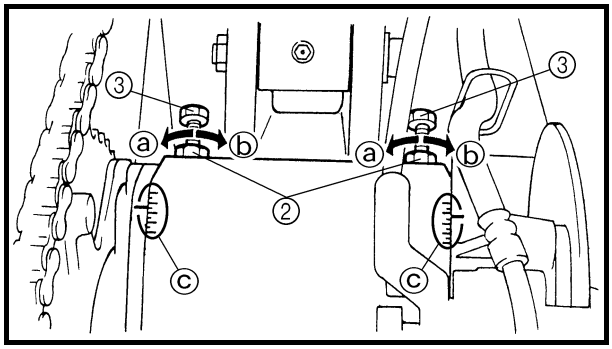

4.Adjust:
- Drive chain slack

****

Adjustment steps:
- Loosen the hub nuts ①.
- Loosen the locknuts ②.
- Turn both adjusting bolts ③ in direction ⓐ or ⓑ until the specified drive chain slack is obtained.

Direction ⓐ	**Drive chain slack is reduced.**
Direction ⓑ	**Drive chain slack is increased.**

NOTE:
To maintain the proper axle alignment, adjust both sides evenly. (There are marks ⓒ on each side of hub.)

CAUTION:
Excessive chain slack will overload the engine and other vital parts; keep the slack within the specified limits.

- If the chain slack cannot be adjusted, replace the sprockets and drive chain as a set.
- Tighten the hub nuts and locknuts.

	Hub nut: **90 Nm (9.0 m • kg, 65 ft • lb)** **Locknut (chain puller):** **16 Nm (1.6 m • kg, 11 ft • lb)**

NOTE:
The chain should be cleaned and lubricated after every use of the machine.

****

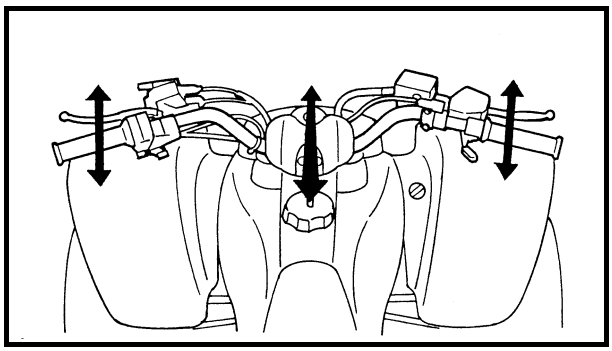

CHECKING THE STEERING SYSTEM

1.Place the machine on a level surface.

2.Check:

- Steering assembly bushings
  Move the handlebar up and down, and/or back and forth.
  Excessive play → Replace the steering stem bushings.

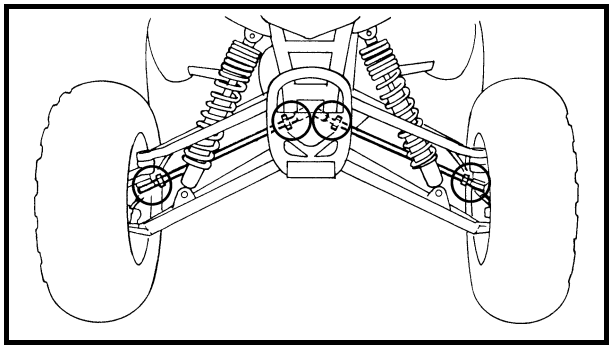

3.Check:

- Tie-rod ends
  Turn the handlebar to the left and/or right until it stops completely, then move the handlebar from the left to the right slightly. Tie-rod end has any vertical play → Replace the tie-rod end(s).

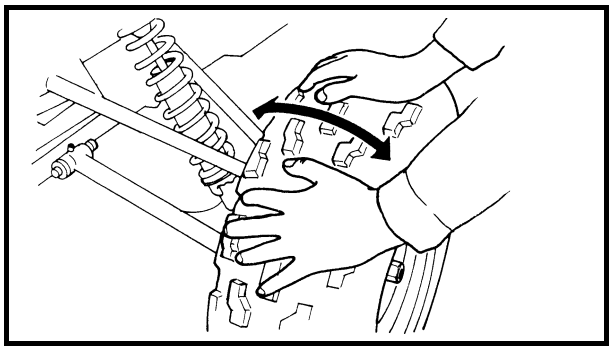

4.Raise the front end of the machine so that there is no weight on the front wheels.

5.Check:

- Ball joints and/or wheel bearings
  Move the wheels laterally back and forth.
  Excessive free play → Replace the front arms (upper and lower) and/or wheel bearings.

ADJUSTING THE TOE-IN

1.Place the machine on a level surface.

2.Measure:

- Toe-in
  Out of specification → Adjust.

	Toe-in: **0 ~ 10 mm (0 ~ 0.39 in)**

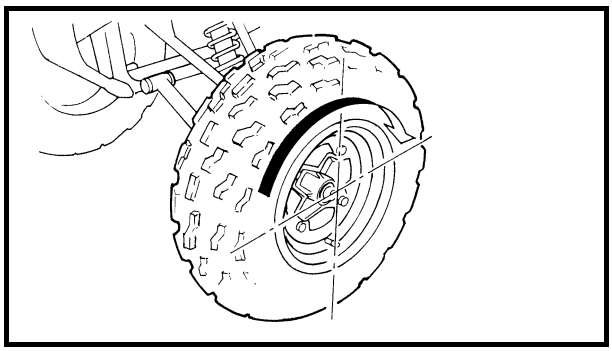

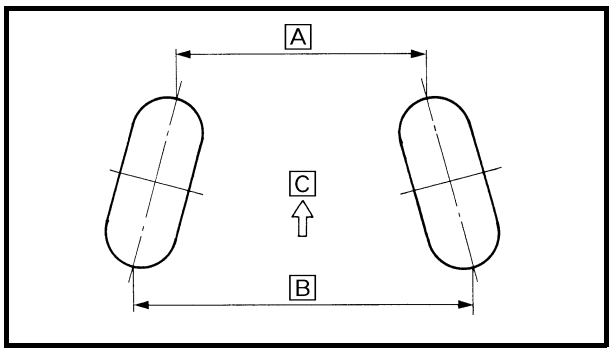

****

Toe-in measurement steps:

NOTE:
Before measuring the toe-in, make sure that the tire pressure is correct.

- Mark both front tire tread centers.
- Raise the front end of the machine so that there is no weight on the front tires.
- Face the handlebar straight ahead.
- Measure the width A between the marks.
- Rotate the front tires 180° until the marks are exactly opposite one another.
- Measure the width B between the marks.
- Calculate the toe-in using the formula given below.

Toe-in = B – A

- If the toe-in is incorrect, adjust it.

C Forward

****

3.Adjust:
- Toe-in

WARNING

- **Be sure that both tie-rods are turned the same amount. If not, the machine will drift right or left even though the handlebar is positioned straight. This may lead to mis-handling and an accident.**
- **After setting the toe-in to specification, run the machine slowly for some distance with both hands lightly holding the handlebar and check that the handlebar responds correctly. If not, turn either the right or left tie-rod within the toe-in specification.**

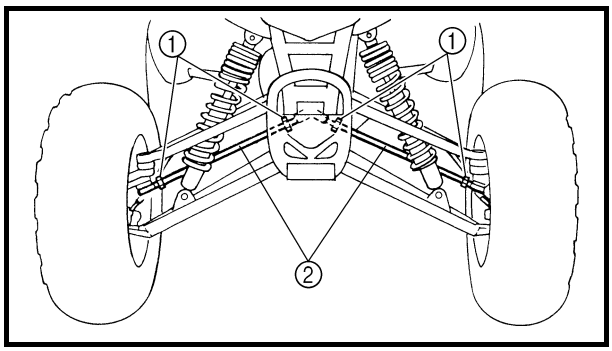

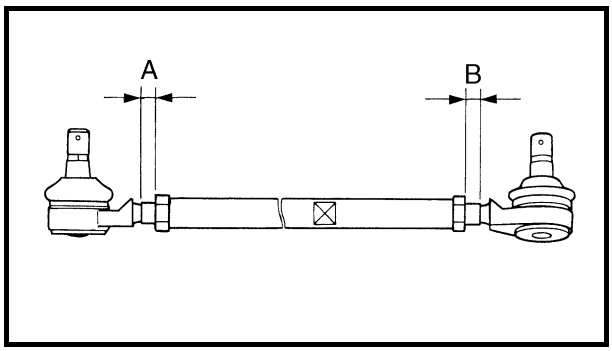

****

Adjustment steps:

- Mark both tie-rods ends.
  This reference point will be needed during adjustment.
- Loosen the locknuts (tie-rod end) ① of both tie-rods.
- The same number of turns should be given to both the right and left tie-rods ② until the specified toe-in is obtained. This is to keep the length of the rods the same.
- Tighten the rod end locknuts of both tie rods.

	Locknut (rod end): **15 Nm (1.5 m • kg, 11 ft • lb)**

NOTE:
Adjust the rod ends so that A and B are equal.

****

ADJUSTING THE FRONT SHOCK ABSORBER

⚠ WARNING

Always adjust both front shock absorber spring preload to the same setting. Uneven adjustment can cause poor handling and loss of stability.

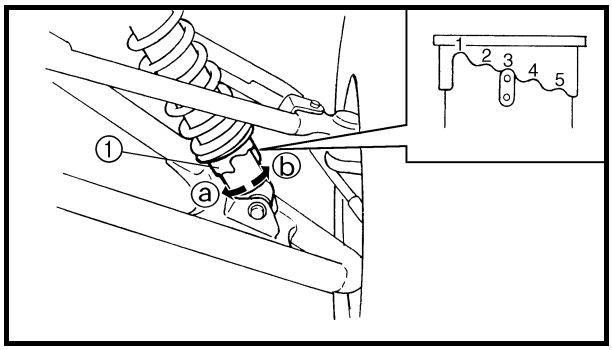

1.Adjust:

- Spring preload
  Turn the adjuster ① in direction ⓐ or ⓑ.

Direction ⓐ	**Spring preload is increased (suspension is harder).**
Direction ⓑ	**Spring preload is decreased (suspension is softer).**

Standard position: 3
Minimum position: 1
Maximum position: 5

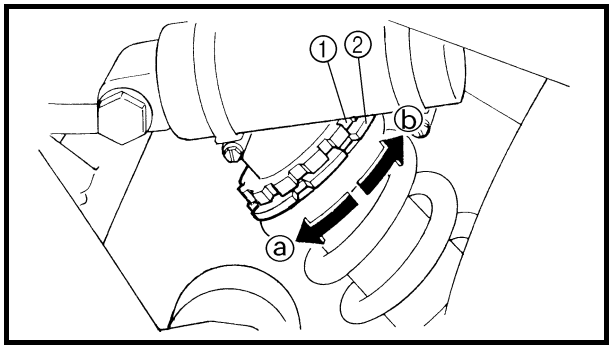

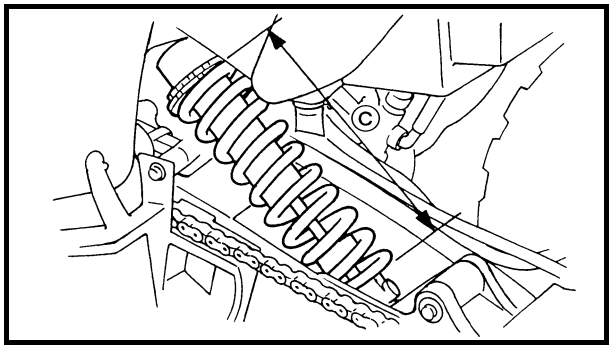

ADJUSTING THE REAR SHOCK ABSORBER

1.Adjust:

- Spring preload

****

Adjustment steps:

- Elevate the rear wheels by placing a suitable stand under the frame.
- Loosen the locknut ①.
- Turn the adjusting ring ② in direction ⓐ or ⓑ.

Direction ⓐ	**Spring preload is increased (suspension is harder).**
Direction ⓑ	**Spring preload is decreased (suspension is softer).**

Adjusting length ⓒ:
Standard: 253 mm (9.96 in)
Minimum: 245 mm (9.65 in)
Maximum: 260 mm (10.24 in)

NOTE:

- Be sure to remove all dirt and mud from around the locknut and adjusting ring before adjustment.
- The length of the spring (installed) changes 1.5 mm (0.06 in) per turn of the adjuster.

CAUTION:

Never attempt to turn the adjusting ring beyond the maximum or minimum setting.

- Tighten the locknut ①.

Locknut:
42 Nm (4.2 m • kg, 30 ft • lb)

NOTE:

Always tighten the locknut against the adjusting ring, then torque it to specification.

****

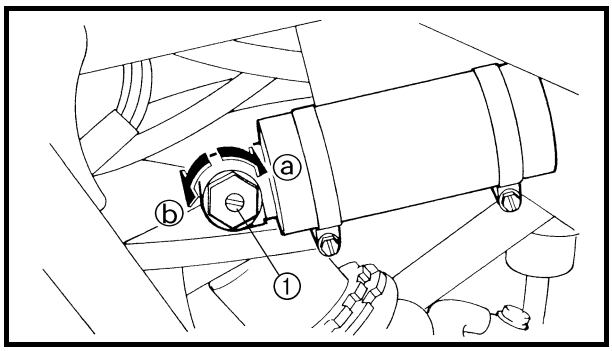

2.Adjust:
- Rebound damping force

****

Adjustment steps:
- Turn the adjusting screw ① in direction ⓐ or ⓑ.

Direction ⓐ	**Rebound damping force is increased.**
Direction ⓑ	**Rebound damping force is decreased.**

From the fully turned-in position:
Standard: 10 clicks out
Minimum: 20 clicks out
Maximum: 3 clicks out

CAUTION:

Do not force the adjuster past the minimum or maximum extent of adjustment. The adjuster may be damaged.

****

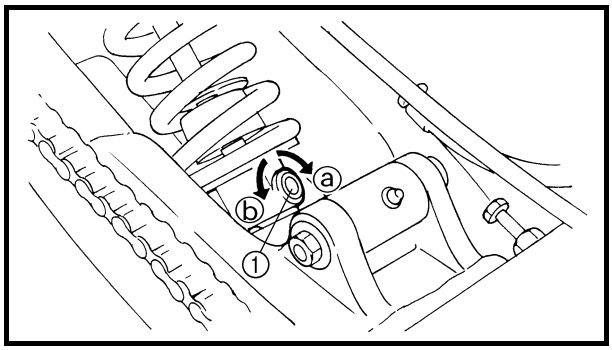

3.Adjust:
- Compression damping force

****

Adjustment steps:
- Turn the adjusting screw ① in direction ⓐ or ⓑ.

Direction ⓐ	**Compression damping force is increased.**
Direction ⓑ	**Compression damping force is decreased.**

From the fully turned-out position:
Standard: 7 clicks in
Minimum: 1 click in
Maximum: 12 clicks in

CAUTION:

Do not forc the adjuster past the minimum or maximum extent of adjustment. The adjuster may be damaged.

****

CHECKING THE TIRE

WARNING

This model is equipped with low pressure tires. It is important that they be inflated correctly and maintained at the proper pressures.

- **TIRE CHARACTERISTICS**

1) Tire characteristics influence the handling of ATV's. The tires listed below have been approved by Yamaha Motor Co., Ltd. for this model. If other tire combinations are used, they can adversely affect your machine's handling characteristics and are therefore not recommended.

	Manufacturer	Size	Type
Front	DUNLOP	AT21×7-10	KT311 Radial
Rear	DUNLOP	AT20×10-9	KT335 Radial

- **TIRE PRESSURE**

1) Recommended tire pressure
   Front 27.5 kPa (0.275 kg/cm^2, 4.0 psi)
   Rear 27.5 kPa (0.275 kg/cm^2, 4.0 psi)
2) Tire pressure below the minimum specification could cause the tire to dislodge from the rim under severe riding conditions.
   The following are minimums:
   Front 24.5 kPa (0.245 kg/cm^2, 3.5 psi)
   Rear 24.5 kPa (0.245 kg/cm^2, 3.5 psi)
3) Use no more than
   Front 250 kPa (2.5 kg/cm^2, 36 psi)
   Rear 250 kPa (2.5 kg/cm^2, 36 psi)
   when seating the tire beads. Higher pressures may cause the tire to burst.
   Inflate the tires slowly and carefully.
   Fast inflation could cause the tire to burst.

- **MAXIMUM LOADING LIMIT**

1)Vehicle load limit (total weight of cargo, rider and accessories, and tongue weight): 100 kg (220 lb)

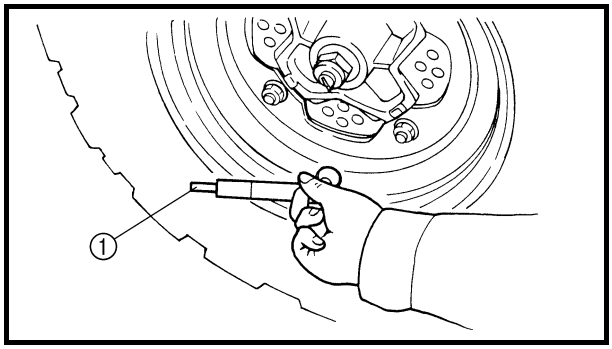

1.Measure:
- Tire pressure (cold tire pressure)
  Out of specification → Adjust.

NOTE:
- The low-pressure tire gauge ① is included as standard equipment.
- If dust or the like is stuck to this gauge, it will not provide the correct readings. Therefore, take two measurements of the tire's pressure and use the second reading.

Cold tire pressure	Front	Rear
Standard	27.5 kPa (0.275 kg/cm², 4.0 psi)	27.5 kPa (0.275 kg/cm², 4.0 psi)
Minimum	24.5 kPa (0.245 kg/cm², 3.5 psi)	24.5 kPa (0.245 kg/cm², 3.5 psi)
Maximum	30.5 kPa (0.305 kg/cm², 4.4 psi)	30.5 kPa (0.305 kg/cm², 4.4 psi)

⚠ WARNING

Uneven or improper tire pressure may adversely affect the handling of this machine and may cause loss of control.
- **Maintain proper tire pressures.**
- **Set tire pressures when the tires are cold.**
- **Tire pressures must be equal in both front tires and equal in both rear tires.**

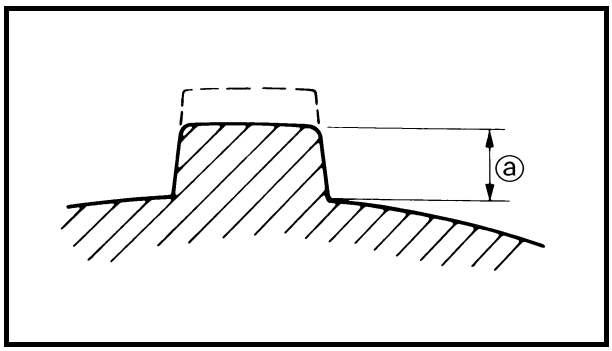

2.Check:
- Tire surfaces
  Wear/damage → Replace.

Tire wear limit ⓐ:
Front and rear: 3.0 mm (0.12 in)

⚠ WARNING

It is dangerous to ride with a worn-out tire. When tire wear is out of specification, replace the tire immediately.

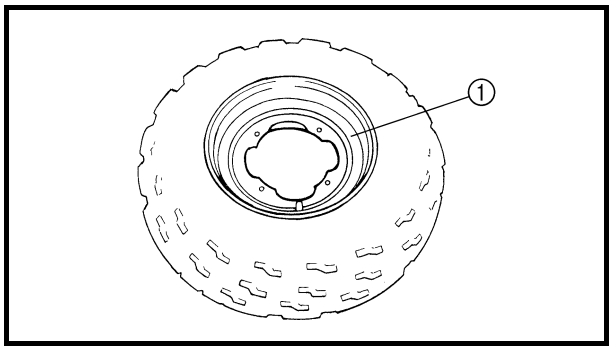

CHECKING THE WHEEL

1.Check:
- Wheels ①
  Damage/bends → Replace.

NOTE:
Always balance the wheel when a tire or wheel has been changed or replaced.

⚠ WARNING

- **Never attempt even small repairs to the wheel.**
- **Ride conservatively after installing a tire to allow it to seat itself properly on the rim.**

CHECKING AND LUBRICATING THE CABLE

⚠ WARNING

A damaged cable sheath may cause corrosion and interfere with the cable movement. An unsafe condition may result so replace a damaged cable as soon as possible.

1.Check:
- Cable sheath
  Damage → Replace.

2.Check:
- Cable operation
  Unsmooth operation → Lubricate or replace.

Recommended lubricant:
Yamaha chain and cable lube or Engine oil

NOTE:
Hold the cable end up and apply several drops of lubricant to the cable.

3.Apply:
- Lithium soap base grease
  (onto end of the cable)

LUBRICATING THE LEVERS AND PEDAL

1.Lubricate the pivoting parts.

Recommended lubricant:
Lithium soap base grease

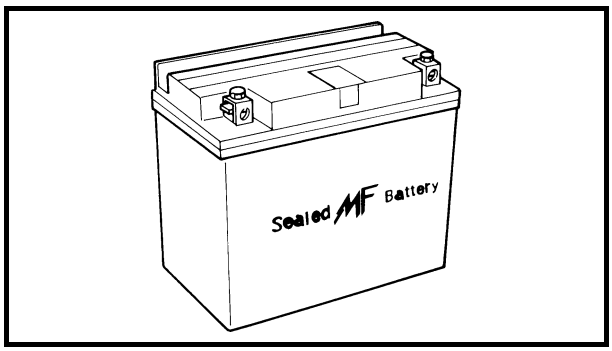

EB305000

ELECTRICAL

CHECKING THE BATTERY

NOTE:

Since the MF battery is a sealed type battery, it is not possible to measure the specific gravity of the electrolyte in order to check the charge state of the battery. Therefore the charge of the battery has to be checked by measuring the voltage at the battery terminals.

CAUTION:

CHARGING METHOD

- **This is a sealed type battery. Never remove the sealing caps. If the sealing caps have been removed, the balance will not be maintained and battery performance will deteriorate.**
- **Charging time, charging current and charging voltage for the MF battery are different from those of general type batteries. The MF battery should be charged as explained in "CHARGING METHOD". If the battery is overcharged, the electrolyte level will drop considerably. Therefore, take special care when charging the battery.**

⚠ WARNING

Battery electrolyte is dangerous; it contains sulfuric acid which is poisonous and highly caustic.

Always follow these preventive measures:

- **Avoid bodily contact with electrolyte as it can cause severe burns or permanent eye injury.**
- **Wear protective eye gear when handling or working near batteries.**

Antidote (EXTERNAL):

- **SKIN - Wash with water.**
- **EYES - Flush with water for 15 minutes and get immediate medical attention.**

Antidote (INTERNAL):

- **Drink large quantities of water or milk followed with milk of magnesia, beaten egg or vegetable oil. Get immediate medical attention.**

Batteries generate explosive hydrogen gas. Always follow these preventive measures:
- **Charge batteries in a well-ventilated area.**
- **Keep batteries away from fire, sparks or open flames (e.g., welding equipment, lighted cigarettes, etc.).**
- **DO NOT SMOKE when charging or handling batteries.**

KEEP BATTERIES AND ELECTROLYTE OUT OF REACH OF CHILDREN.

1.Remove:
- Seat
- Battery holding bracket

  Refer to “SEAT, FENDERS AND FUEL TANK”.

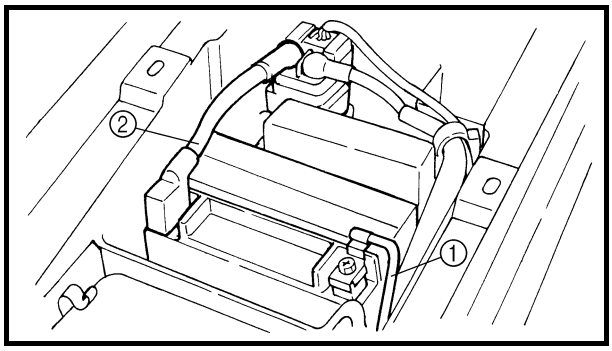

2.Disconnect:
- Battery leads

CAUTION:

First disconnect the negative lead ①, then disconnect the positive lead ②.

3.Remove:
- Battery

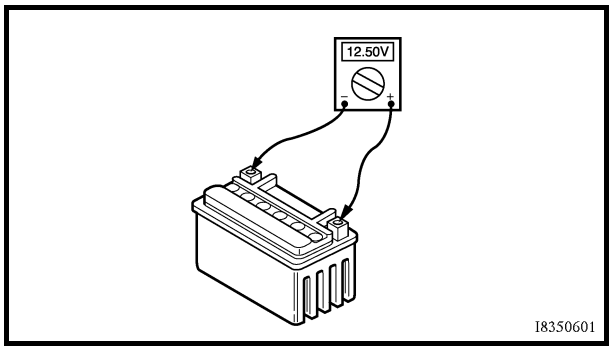

4.Check:
- Battery condition

****

Battery condition checking steps:
- Connect a digital voltmeter to the battery terminals.

Tester (+) lead → battery (+) terminal
Tester (–) lead → battery (–) terminal

NOTE:

The charge state of an MF battery can be checked by measuring the open-circuit voltage (i.e. the voltage when the positive terminal is disconnected).

Open-circuit voltage	Charging time
12.8 V or higher	No charging is necessary.

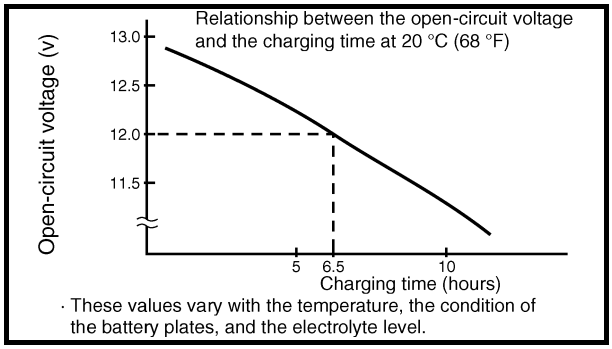

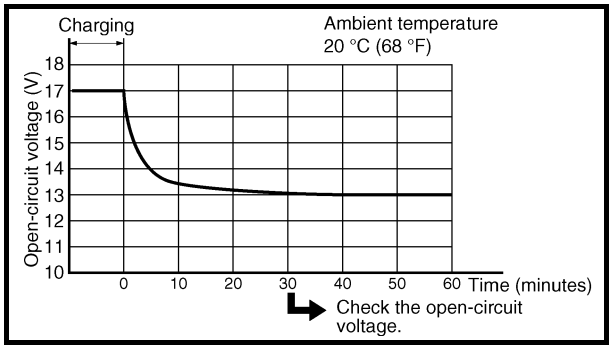

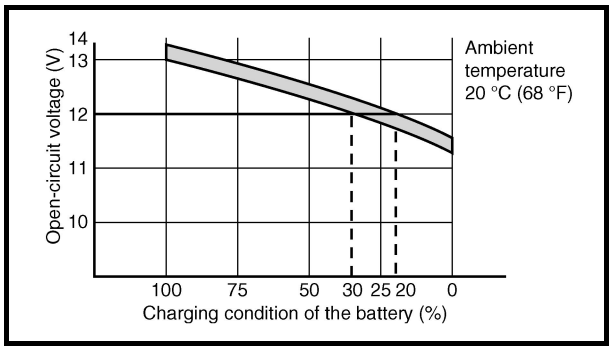

- Check the condition of the battery using the following charts.

Example:

- Open-circuit voltage = 12.0 V
- Charging time = 6.5 hours
- Charge condition of the battery = 20 ~ 30%
- Charging method for MF batteries

CAUTION:

- **If it is impossible to set the standard charging current, be careful not to overcharge.**
- **When charging the battery, be sure to remove it from the motorcycle. (If charging has to be done with the battery mounted on the motorcycle, be sure to disconnect the wire at the negative terminal.)**
- **Never remove the sealing caps of an MF battery.**
- **Make sure that the charging clips are in full contact with the terminal and that they are not shorted together. (A corroded clip on the charger may cause the battery to generate heat in the contact area. A weak clip spring may cause sparks.)**
- **Before removing the clips from the battery terminals, be sure to turn off the charger's power switch.**
- **The open-circuit voltage variation for the MF battery, after charging, is shown below. As shown in the figure, the open-circuit voltage stabilizes about 30 minutes after charging has been completed. Therefore, wait 30 minutes after charging is completed before measuring the open-circuit voltage.**

****

Charging method using a variable voltage charger

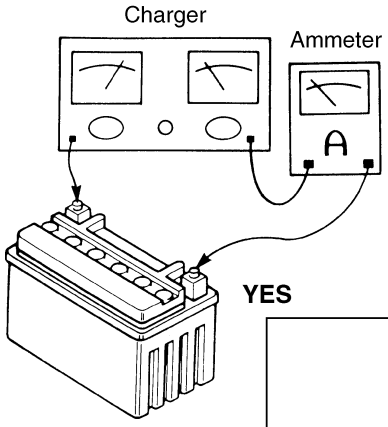

Measure the open-circuit voltage prior to charging.

NOTE:
Leave the battery unused for more than 30 minutes before measuring its open-circuit voltage.

Connect a charger and ammeter to the battery and start charging.

NOTE:
Set the charging voltage to 16 ~ 17 V. (If the charging voltage is lower, charging will be insufficient, if it is higher, the battery will be over-charged.)

Is the amperage higher than the standard charging amperage written on the battery?

YES → Adjust the voltage to obtain the standard charging amperage.

NO → Adjust the charging voltage to 20 ~ 25 V.

Monitor the amperage for 3 ~5 minutes. Is the standard charging amperage exceeded?

YES → Adjust the voltage to obtain the standard charging amperage.

NO → If the amperage dose not exceed the standard charging amperage after 5 minutes, replace the battery.

Set the timer to the charging time determined by the open -circuit voltage.
Refer to “CHECKING AND CHARGING THE BATTERY.”

If the required charging time exceeds 5 hours, it is advisable to check the charging amperage after 5 hours.If there is any change in the amperage, readjust the voltage to obtain the standard charging amperage.

Leave the battery unused for more than 30 minutes before measuring its open-circuit voltage.
12.8 V ➔ Charging is complete.
12.0 ~12.7 V ➔ Recharging is required.
Under 12.0 V ➔ Replace the battery.

Charging method using a constant voltage charger

Measure the open-circuit voltage prior to charging.

NOTE:
Leave the battery unused for more than 30 minutes before measuring its open-circuit voltage.

Connect a charger and ammeter to the battery and start charging.

Is the amperage higher than the standard charging amperage written on the battery?

YES

Charge the battery until the charging voltage reaches 15 V.

NOTE:
Set the charging time to a maximum of 20 hours.

Leave the battery unused for more than 30 minutes before measuring its open-circuit voltage.
12.8 V ➔ Charging is complete.
12.0 ~12.7 V ➔ Recharging is required.
Under 12.0 V ➔ Replace the battery.

CAUTION:
Constant amperage chargers are not suitable for charging MF batteries.

NO

This type of battery charger cannot charge an MF battery. A variable-voltage charger is recommended.

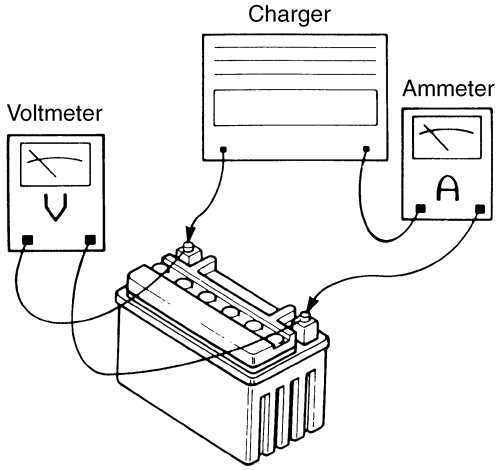

5.Check:
- Battery terminals
  Dirty → Clean with a wire brush.
  Poor connection → Correct.

NOTE:
After cleaning the terminals, apply a light coat of grease.

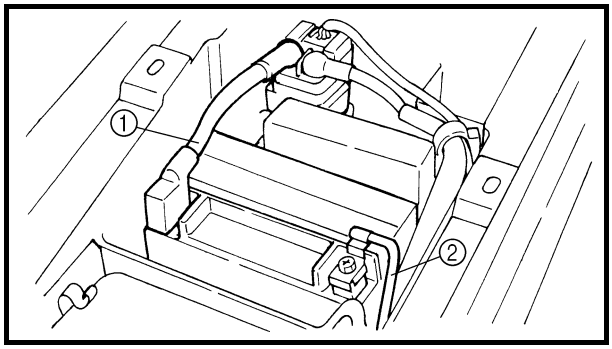

6.Install:
- Battery

7.Connect:
- Battery leads

CAUTION:
First, connect the positive lead ①, then connect the negative lead ②.

8.Install:
- Battery holding bracket
- Seat
  Refer to "SEAT, FENDERS AND FUEL TANK".

CHECKING THE FUSE

CAUTION:
Always turn off the main switch when checking or replacing a fuse. Otherwise, a short circuit may occur.

1.Remove:
- Seat
  Refer to "SEAT, FENDERS AND FUEL TANK".

2.Check:
- Fuse

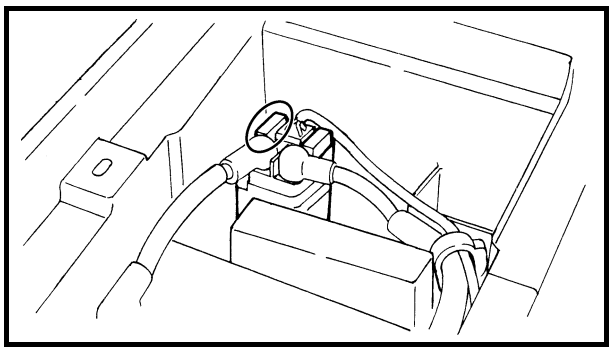

****

Checking steps:
- Connect the pocket tester to the fuse and check it for continuity.

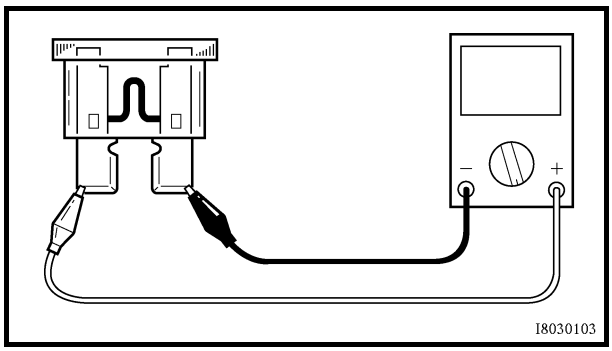

NOTE:
Set the tester to the "Ω × 1" position.

Pocket tester:
P/N. YU-03112, 90890-03112

- If the tester indicates 0, replace the fuse.

****

3.Replace:
- Blown fuse

****

Replacement steps:
- Turn off the ignition.
- Install a new fuse of the proper amperage.
- Turn on switches to verify operation of the related electrical devices.
- If the fuse immediately blows again, check the electrical circuit.

****

Description	Current rating	Quantity
Main	20 A	1
Reserve	20 A	1

WARNING

Never use a fuse with a rating other than that specified. Never use other materials in place of a fuse. An improper fuse may cause extensive damage to the electrical system, a malfunction of the lighting and ignition systems and could possibly cause a fire.

4.Install:
- Seat
  Refer to "SEAT, FENDERS AND FUEL TANK".

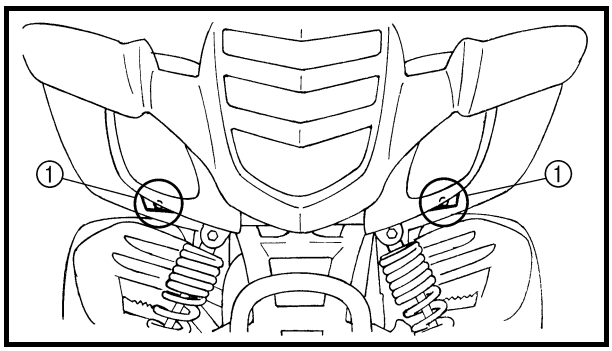

ADJUSTING THE HEADLIGHT BEAM

1.Adjust:

- Headlight beam (vertically)

****

Adjustment steps:

- Loosen the screw ①.
- Slide the headlight lens unit under.

Slide forward	**Headlight beam raises.**
Slide backward	**Headlight beam lowers.**

- Tighten the screw ①.

****

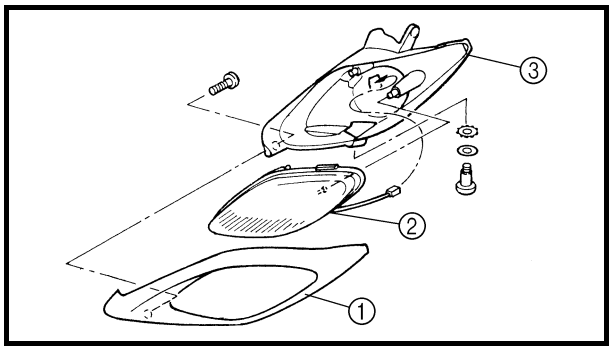

REPLACING THE HEADLIGHT BULB

1.Remove:

- Headlight
  Refer to “SEAT, FENDERS AND FUEL TANK”.

2.Remove:

- Cover ①
- Headlight unit ②
- Case ③

NOTE:

Pull outward on the rear of the headlight unit ②, and then pull out ward on the front.

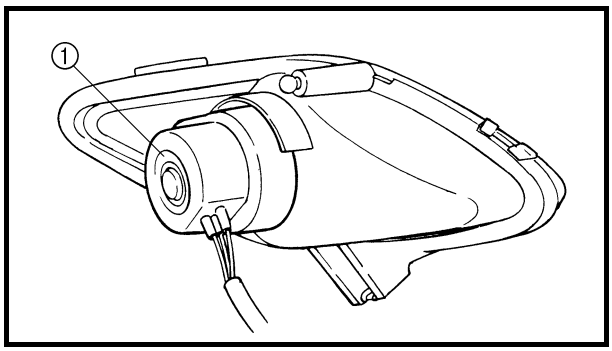

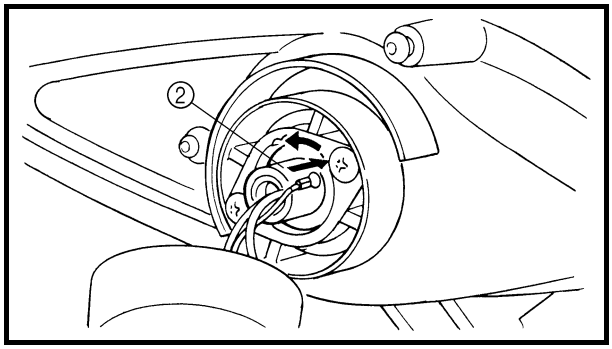

3.Remove:
- Cover ①
- Bulb holder ②
- Bulb

NOTE:
Turn the bulb holder counterclockwise and remove the defective bulb.

⚠ WARNING
Keep flammable products and your hands away from the bulb while it is on, since it will be hot. Do not touch the bulb until it cools down.

4.Install:
- Bulb New
  Secure the new bulb with the headlight unit.

CAUTION:
Avoid touching the glass part of the bulb. Keep it free from oil; otherwise, the transparency of the glass, life of the bulb, and luminous flux will be adversely affected. If oil gets on the bulb, thoroughly clean it with a cloth moistened with alcohol or lacquer thinner.

5.Install:
- Bulb holder
- Cover
- Cover

6.Install:
- Headlight
  Refer to “SEAT, FENDERS AND FUEL TANK”.

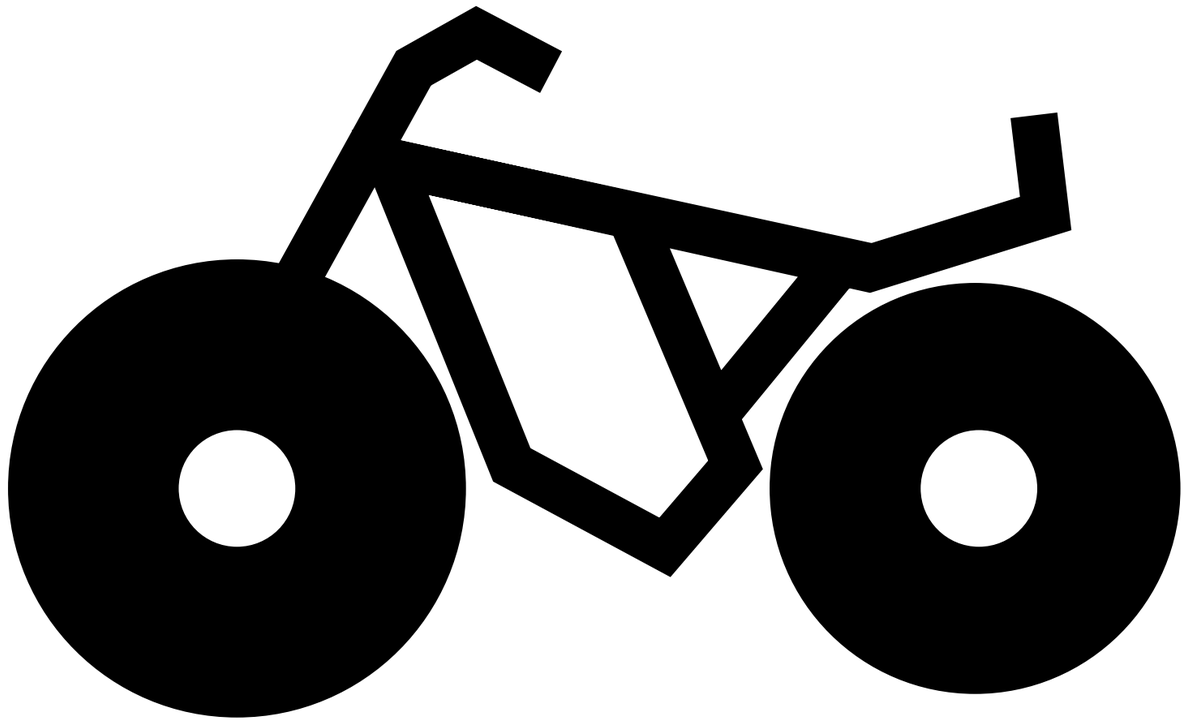

CHAS 4

CHAPTER 4.
CHASSIS

CHASSIS

FRONT WHEELS

FRONT WHEELS

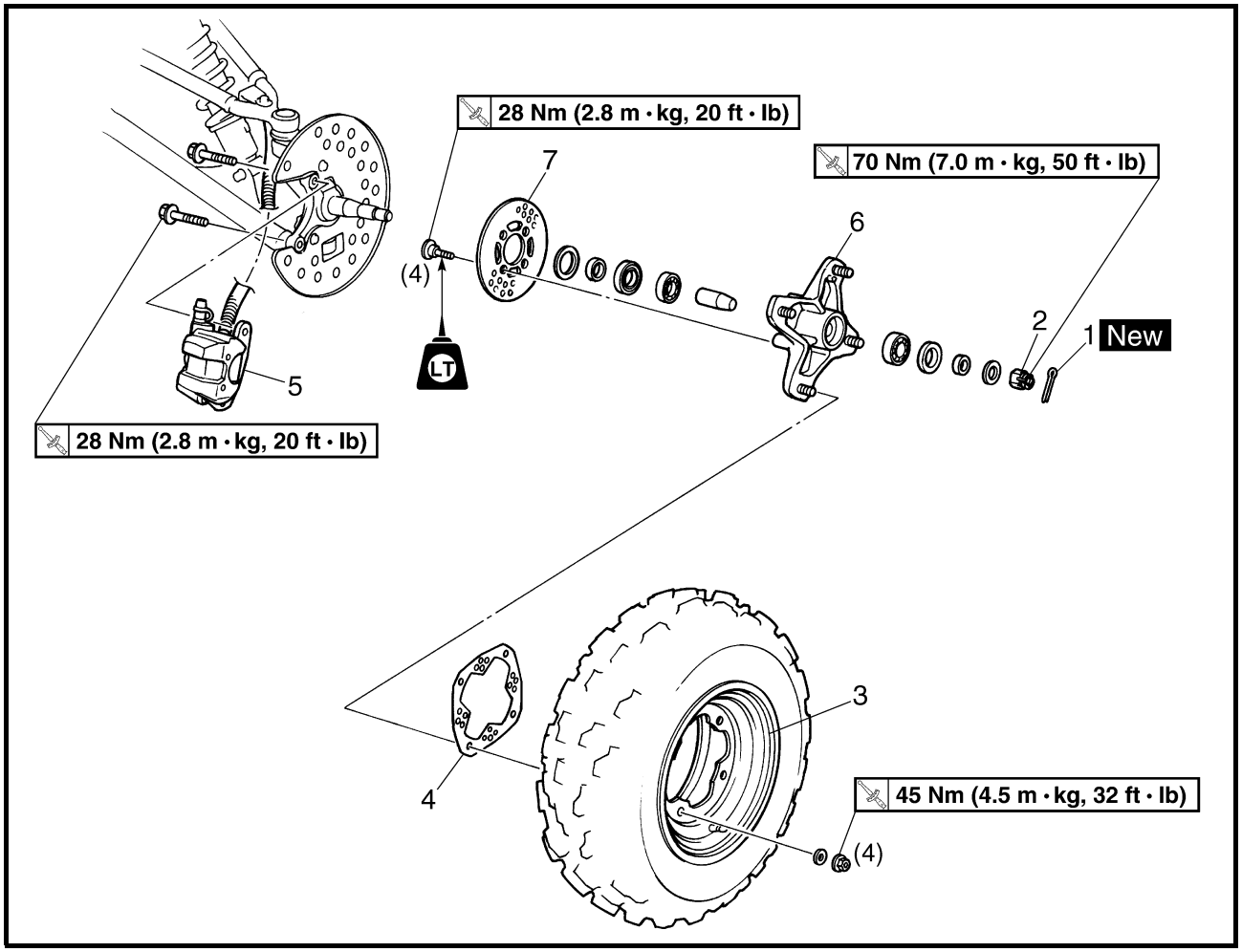

Order	Job name/Part name	Q'ty	Remarks
	Removing the front wheel		Remove the parts in the order below. Place the machine on a level surface. **WARNING** **Securely support the machine so there is no danger of it falling over.**
1	Cotter pin	1	Refer to "INSTALLING THE WHEEL HUB".
2	Axle nut	1	
3	Front wheel	1	Refer to "INSTALLING THE WHEEL".
4	Brake disc guard (outer)	1	
5	Brake caliper assembly	1	**NOTE:** Do not apply the brake lever after the brake calipers have been removed, otherwise the brake pads will be forced shut.

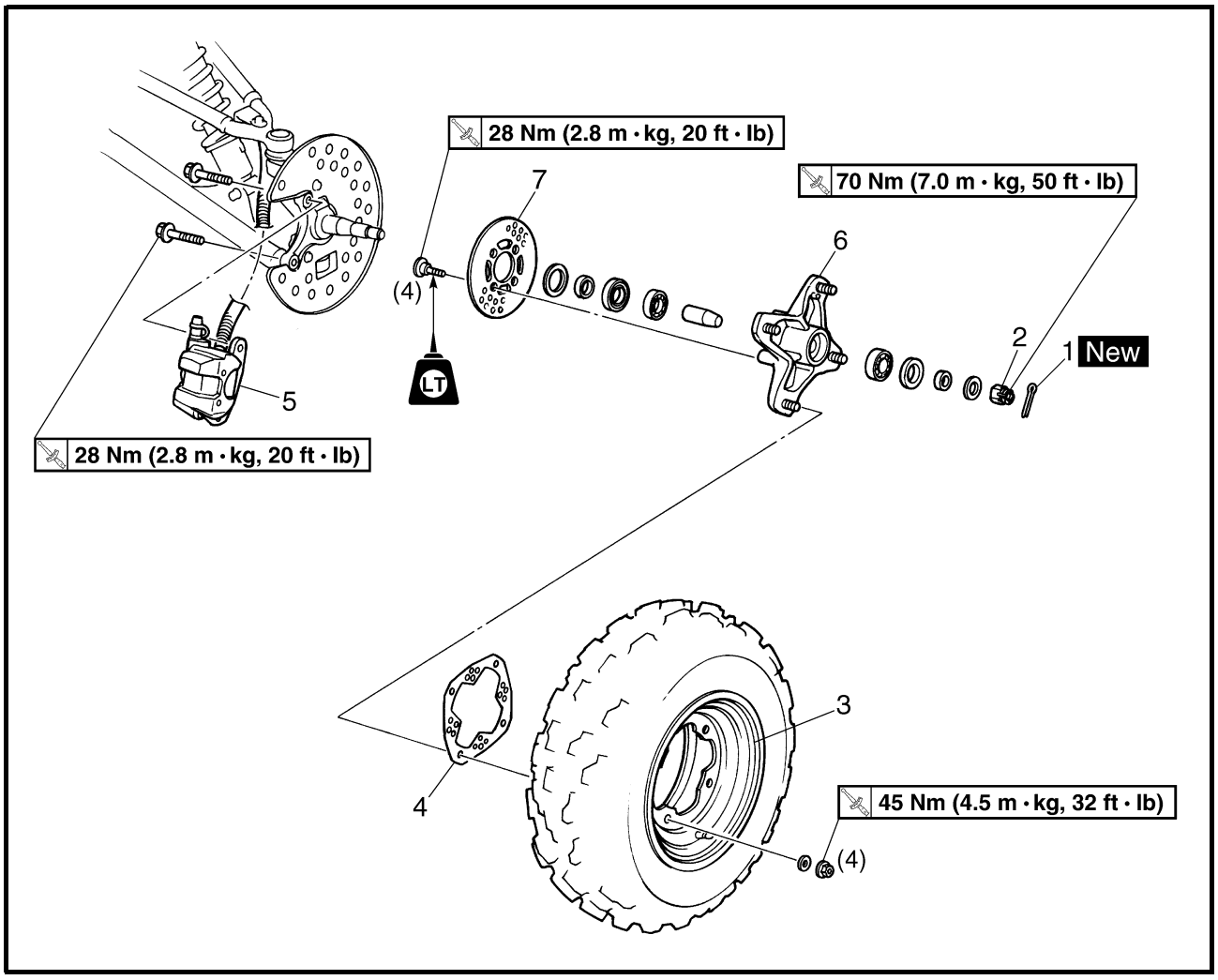

Order	Job name/Part name	Q'ty	Remarks
6	Wheel hub	1	
7	Brake disc	1	
			For installation, reverse the removal procedure.

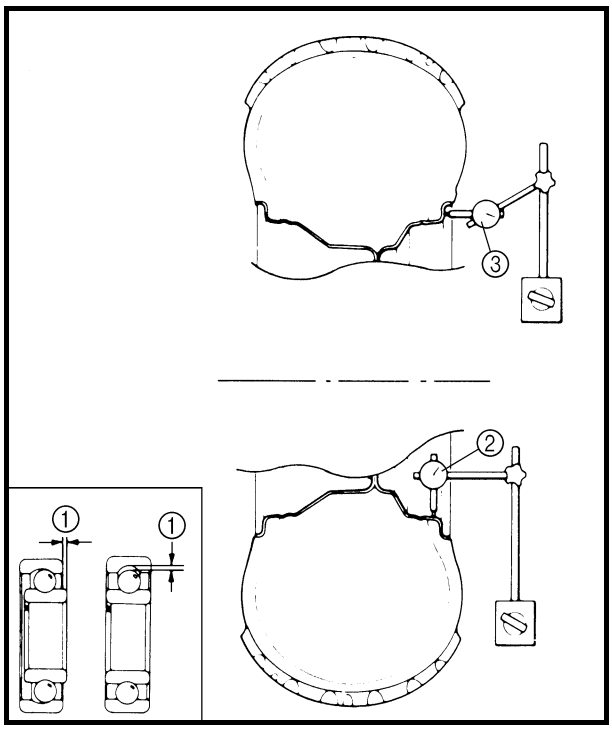

CHECKING THE WHEEL

1.Check:
- Wheel

2.Measure:
- Wheel runout
  Over the specified limit → Replace the wheel or check the wheel bearing play ①.

Wheel runout limit:
Radial ②: 2.0 mm (0.08 in)
Lateral ③: 2.0 mm (0.08 in)

3.Check:
- Wheel balance
  Out of balance → Adjust.

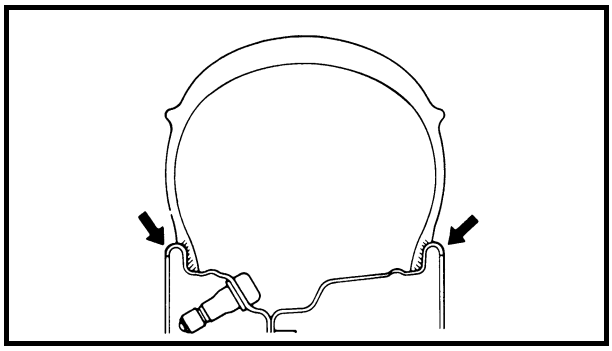

WARNING

After replacing the tire, ride conservatively to allow the tire to be properly seated in the rim. Failure to do so may cause an accident resulting in machine damage and possible operator injury.

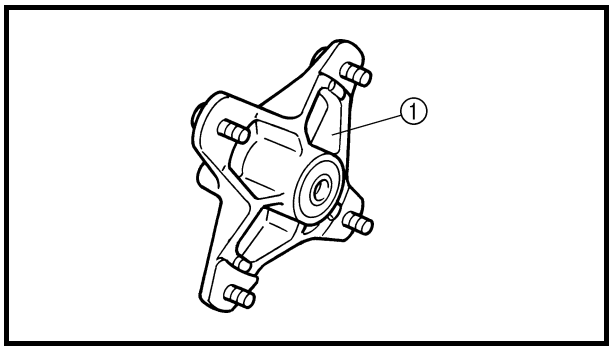

CHECKING THE WHEEL HUB

1.Check:
- Wheel hub ①
  Cracks/damage → Replace.

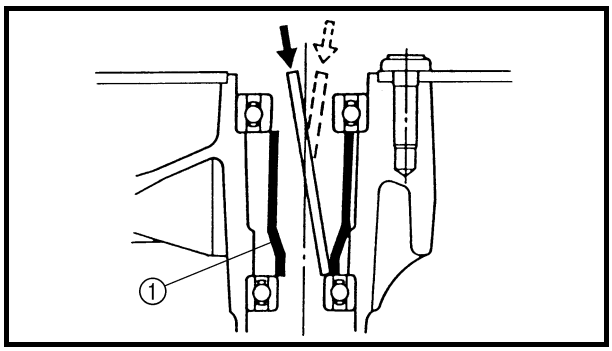

2.Check:
- Wheel bearings
  Wheel hub play/wheel turns roughly → Replace.

****

Wheel bearing replacement steps:
- Clean wheel hub exterior.
- Drive bearing out by pushing spacer aside and tapping around perimeter of bearing inner race. Use soft metal drift punch and hammer. The spacer ① "floats" between bearings. Remove both bearings as described.

⚠ WARNING

Eye protection is recommended when using striking tools.

- To install the wheel bearings, reverse the above sequence. Use a socket that matches outside diameter of bearing outer race to drive in bearing.

CAUTION:

Do not strike the center race or balls of the bearing. Contact should be made only with the outer race.

****

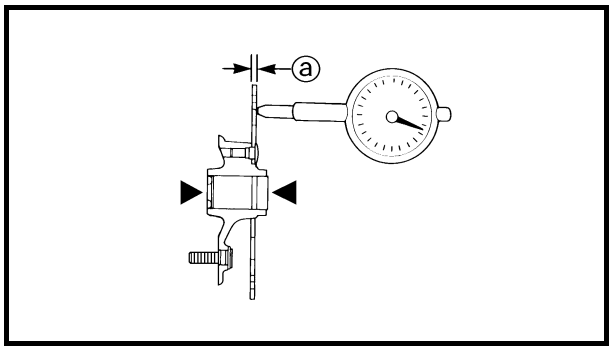

CHECKING THE BRAKE DISC

1.Check:
- Brake disc
  Galling/damage → Replace.

2.Measure:
- Brake disc deflection
  Out of specification → Replace.

	Brake disc maximum deflection: 0.15 mm (0.006 in)

- Brake disc thickness ⓐ
  Out of specification → Replace.

	Brake disc minimum thickness: 3 mm (0.12 in)

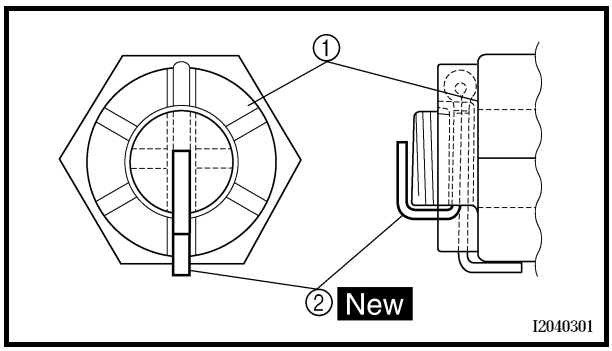

INSTALLING WHEEL HUB

1.Install:

- Axle nut ① **70 Nm (7.0 m • kg, 50 ft • lb)**
- Cotter pin ② New

NOTE:

Do not loosen the axle nut after torquing it. If the axle nut groove is not aligned with the cotter pin hole, align the groove with the hole by tightening the axle nut.

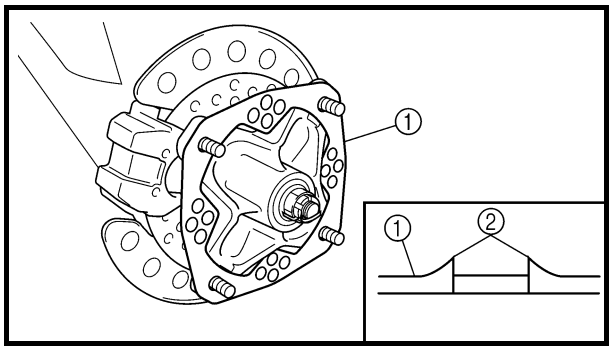

INSTALLING THE WHEEL

1.Install:

- Brake disc guard (outer) ①

NOTE:

Install the brake disc guard (outer) with punched burrs ② on the wheel hub side.

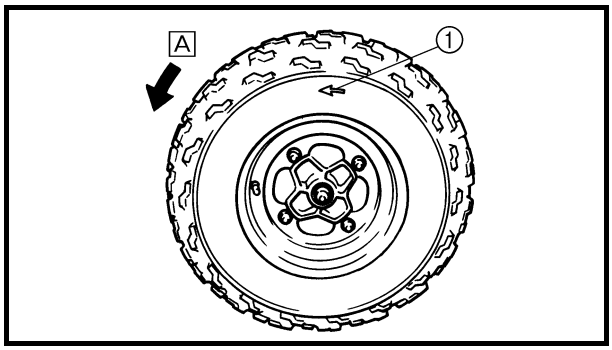

2.Install:

- Wheel

NOTE:

The arrow mark ① on the tire must point in the direction of rotation A of the wheel.

REAR WHEELS, WHEEL AXLE AND HUB

REAR WHEELS

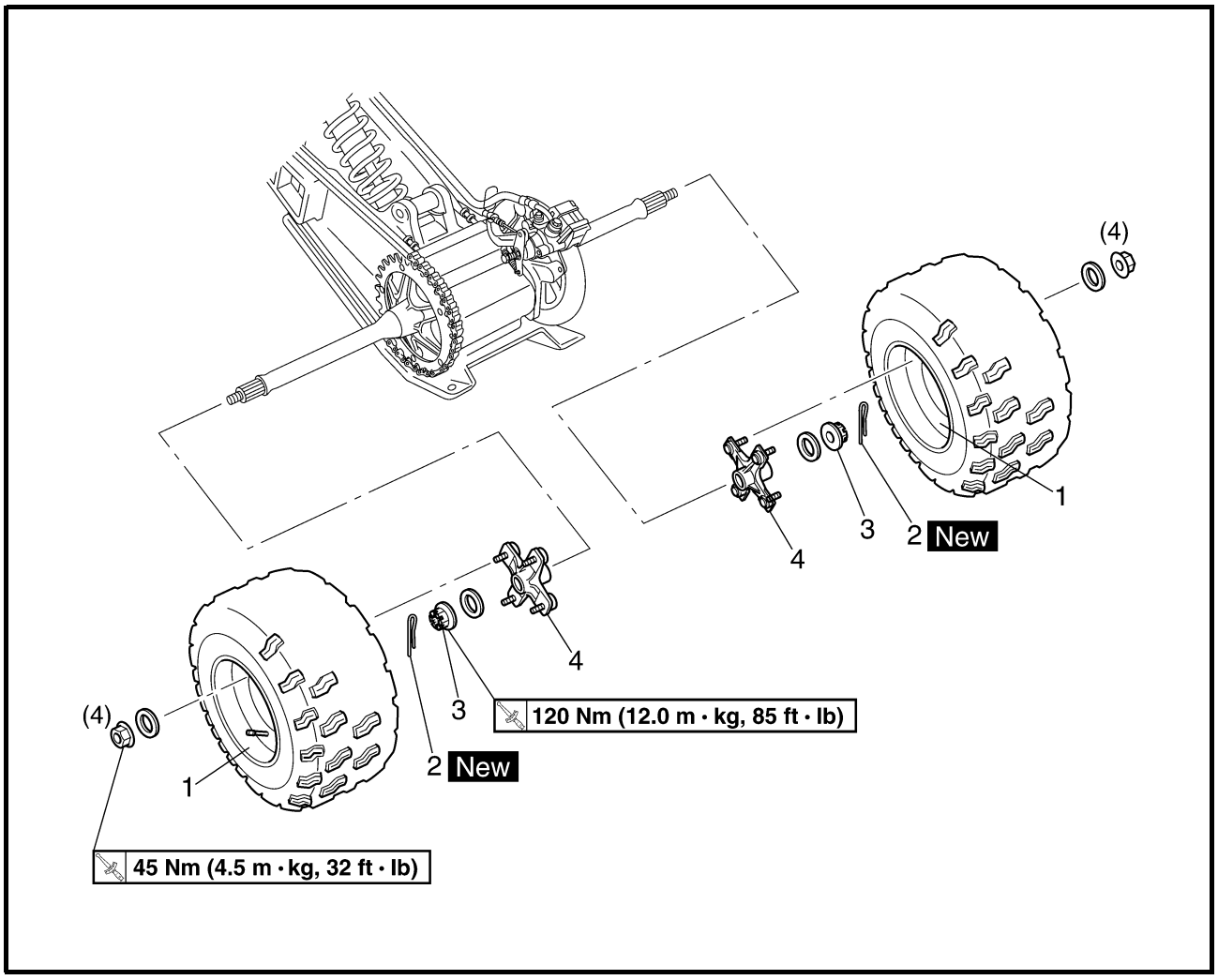

Order	Job name/Part name	Q'ty	Remarks
	Removing the rear wheel		Remove the parts in the order below. Place the machine on a level surface. **⚠ WARNING** **Securely support the machine so there is no danger of it falling over.**
1	Rear wheel	2	Refer to "INSTALLING THE WHEEL".
2	Cotter pin	2	Refer to "INSTALLING THE WHEEL HUB".
3	Axle nut	2	
4	Wheel hub	2	
			For installation, reverse the removal procedure.

WHEEL AXLE AND HUB

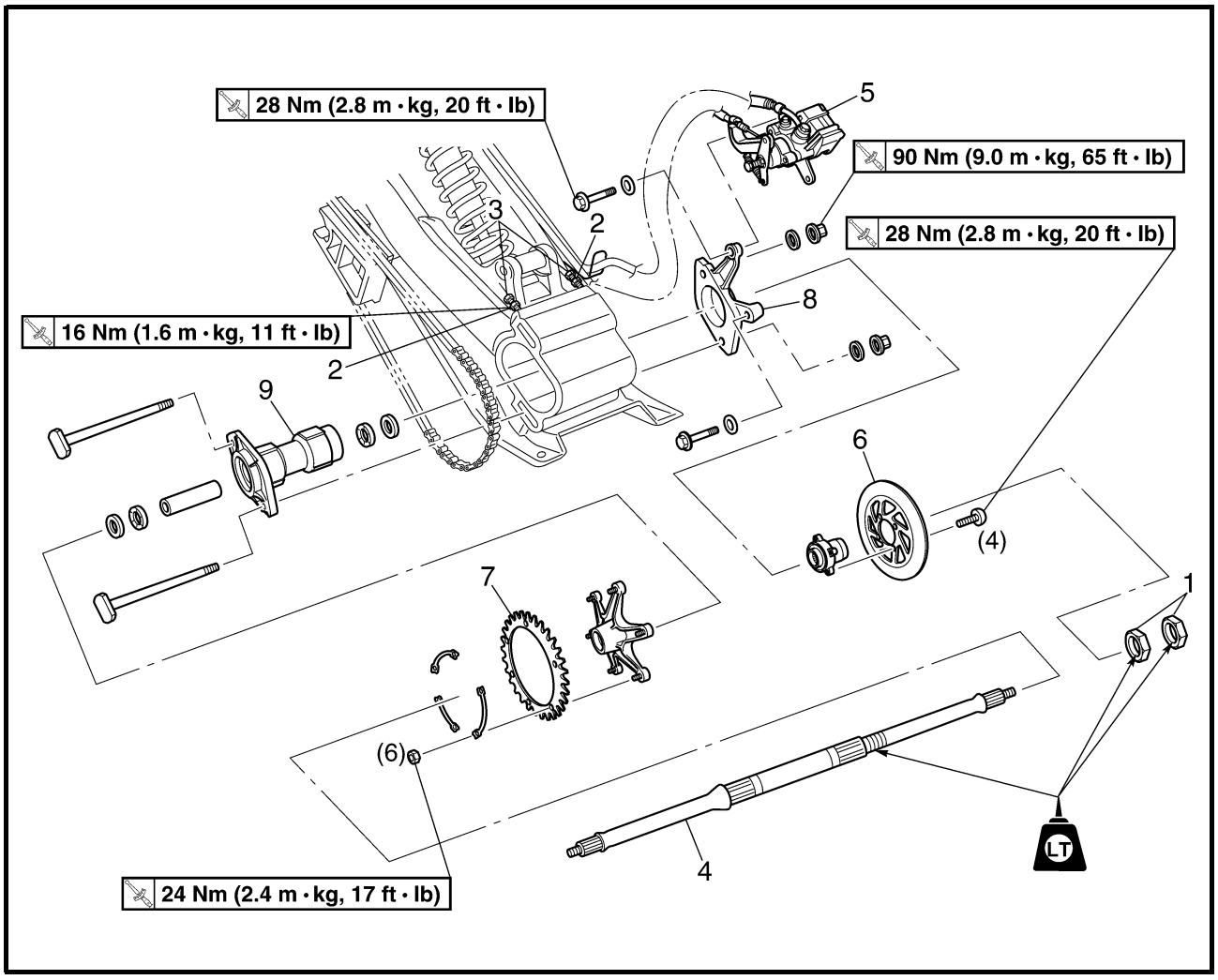

Order	Job name/Part name	Q'ty	Remarks
	Removing the wheel axle and hub		Remove the parts in the order below.
1	Nut	2	Refer to "INSTALLING THE NUTS (REAR AXLE)".
2	Locknut	2	Refer to "REMOVING THE REAR AXLE".
3	Adjusting bolt	2	
4	Rear axle	1	
5	Brake caliper	1	**NOTE:** Do not apply the brake pedal and do not use the parking brake when the brake caliper is off of the brake disc as the brake pad will be force shut.

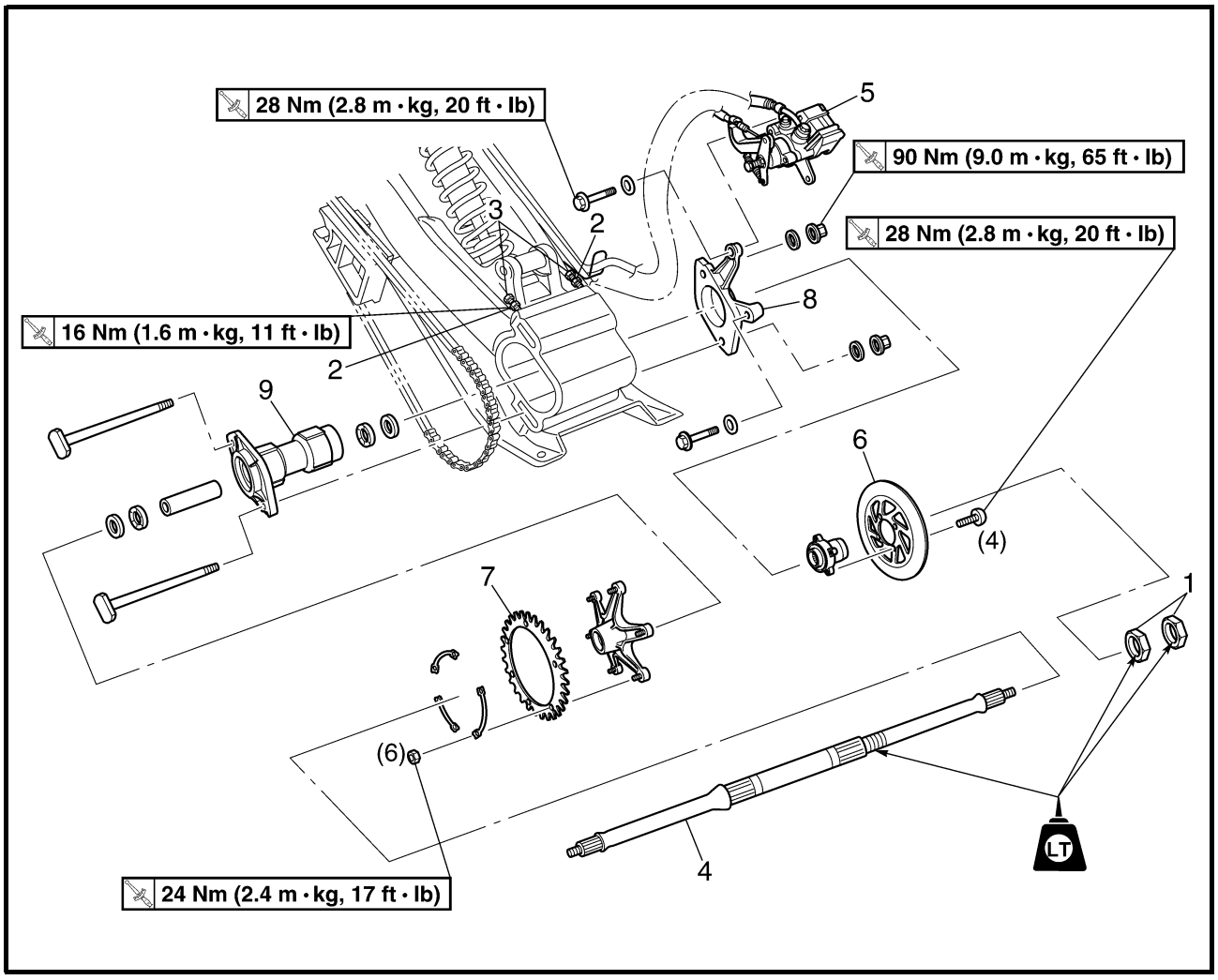

Order	Job name/Part name	Q'ty	Remarks
6	Brake disc	1	
7	Driven sprocket	1	
8	Brake caliper bracket	1	
9	Hub	1	
			For installation, reverse the removal procedure.

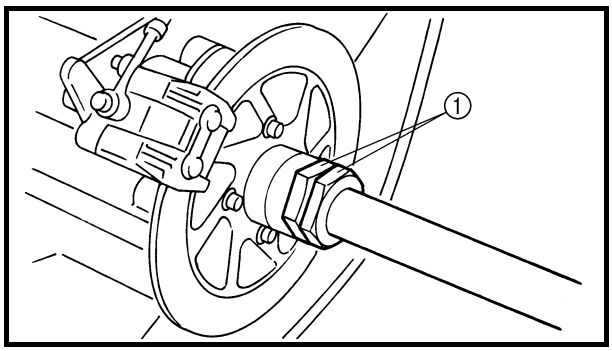

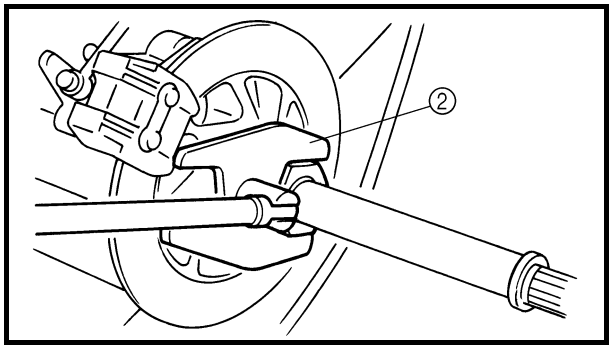

REMOVING THE REAR AXLE

1.Place the machine on a level surface.

2.Loosen:

- Nuts (rear axle) ①

NOTE:

- Apply the brake pedal so that the rear axle does not turn, when loosening the nuts.
- Use a axle nut wrench (50 mm) ②.

Axle nut wrench (50 mm):
P/N. YM-37132, 90890-01419

3.Elevate the rear wheels by placing the suitable stand under the frame.

4.Remove:

- Rear wheels
- Wheel hubs
- Nuts (rear axle)

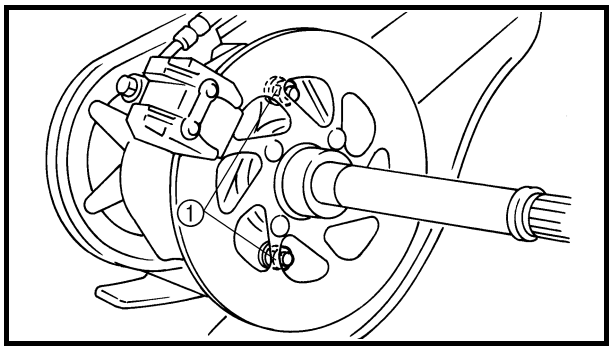

5.Loosen:

- Hub nuts ①

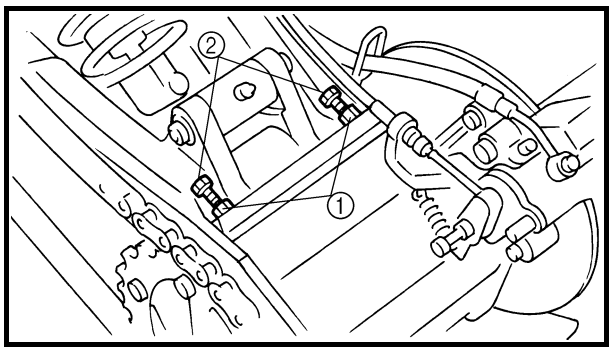

6.Loosen:

- Locknuts ①
- Adjusting bolts ②

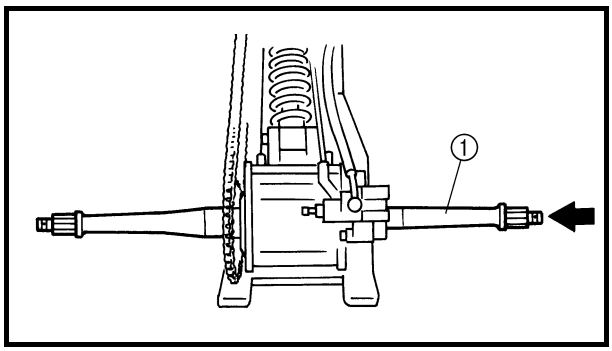

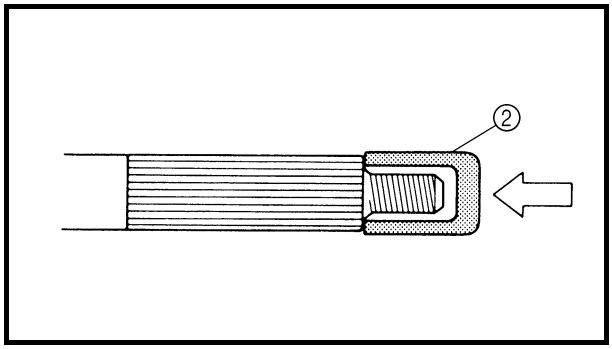

7.Remove:
- Rear axle ①

CAUTION:
- **Never directly tap the axle end with a hammer, since this will result in damage to the axle thread and spline.**
- **Attach a suitable socket ② on the axle end and tap it with a soft hammer. Pull out the rear axle to the right.**

CHECKING THE WHEEL
Refer to “FRONT WHEELS”.

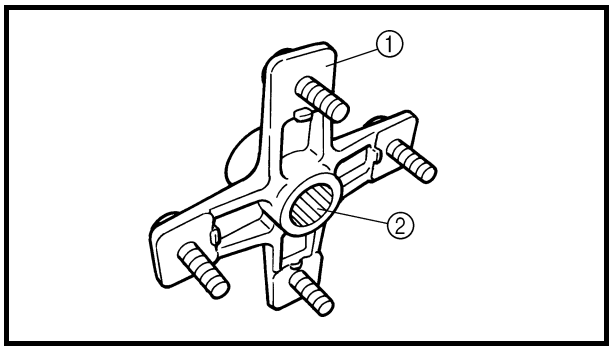

CHECKING THE WHEEL HUB
1.Check:
- Wheel hub ①
  Cracks/damage → Replace.
- Splines (wheel hub) ②
  Wear/damage → Replace the wheel hub.

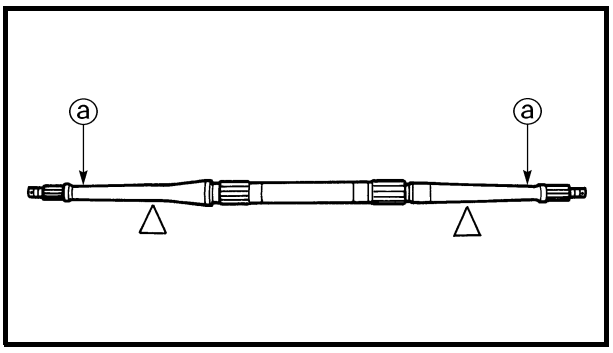

CHECKING THE REAR AXLE
1.Check:
- Rear axle runout ⓐ
  Out of specification → Replace.

WARNING
Do not attempt to straighten a bent axle.

	Rear axle runout limit: **1.5 mm (0.06 in)**

CHECKING THE HUB

1.Check:

- Hub bearings
  Refer to “FRONT WHEELS-WHEEL HUB INSPECTION”.

CHECKING THE BRAKE DISC

Refer to “FRONT WHEELS”.

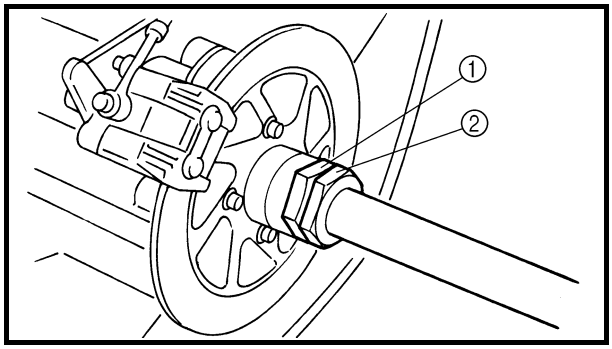

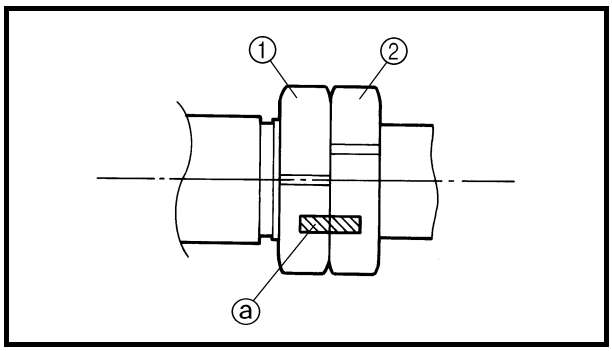

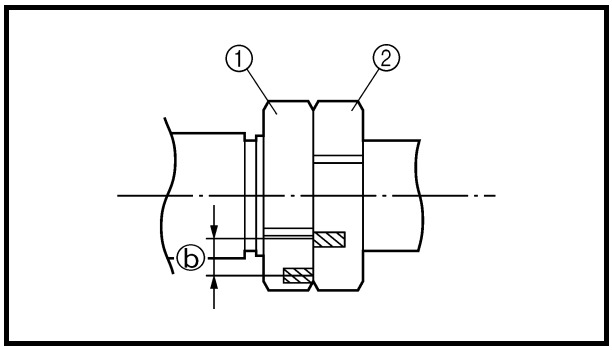

INSTALLING THE NUTS (REAR AXLE)

1.Tighten:

Nuts (rear axle) ①, ②

****

Nuts tightening steps:

NOTE:

Before tightening the nuts, apply the LOCTITE® to the thread portion of the rear axle.

- Finger tighten the inside nut ① while checking the ring gear engagement.
- Tighten the inside nut with rear axle nut wrench to specification while holding the rear axle.

	**Axle nut wrench (50 mm):** **P/N. YM-37132, 90890-01419**
	**Inside nut (first tightening):** **55 Nm (5.5 m • kg, 40 ft • lb)**

- Hold the inside nut ① and tighten the outside nut ② with rear axle nut wrench to specification.

	**Outside nut:** **190 Nm (19.0 m • kg, 140 ft • lb)**

- Draw the line ⓐ on inside and outside nut.
- Hold the outside nut ② and tighten back the inside nut ① with rear axle nut wrench to specification.

	**Inside nut (final tightening):** **240 Nm (24.0 m • kg, 170 ft • lb)**

- Measure the distance ⓑ between lines. If distance ⓑ is less than 15 mm (0.59 in), retighten back the inside nut.

****

INSTALLING THE WHEEL HUB

Refer to “FRONT WHEELS”.

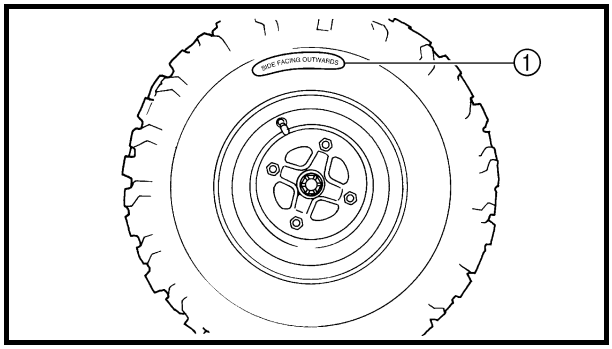

INSTALLING THE WHEEL

1.Install:

- Wheel

NOTE:

The wording on the tire “SIDE FACING OUTWARDS” ① must be facing outwards.

FRONT AND REAR BRAKES

FRONT BRAKE PADS

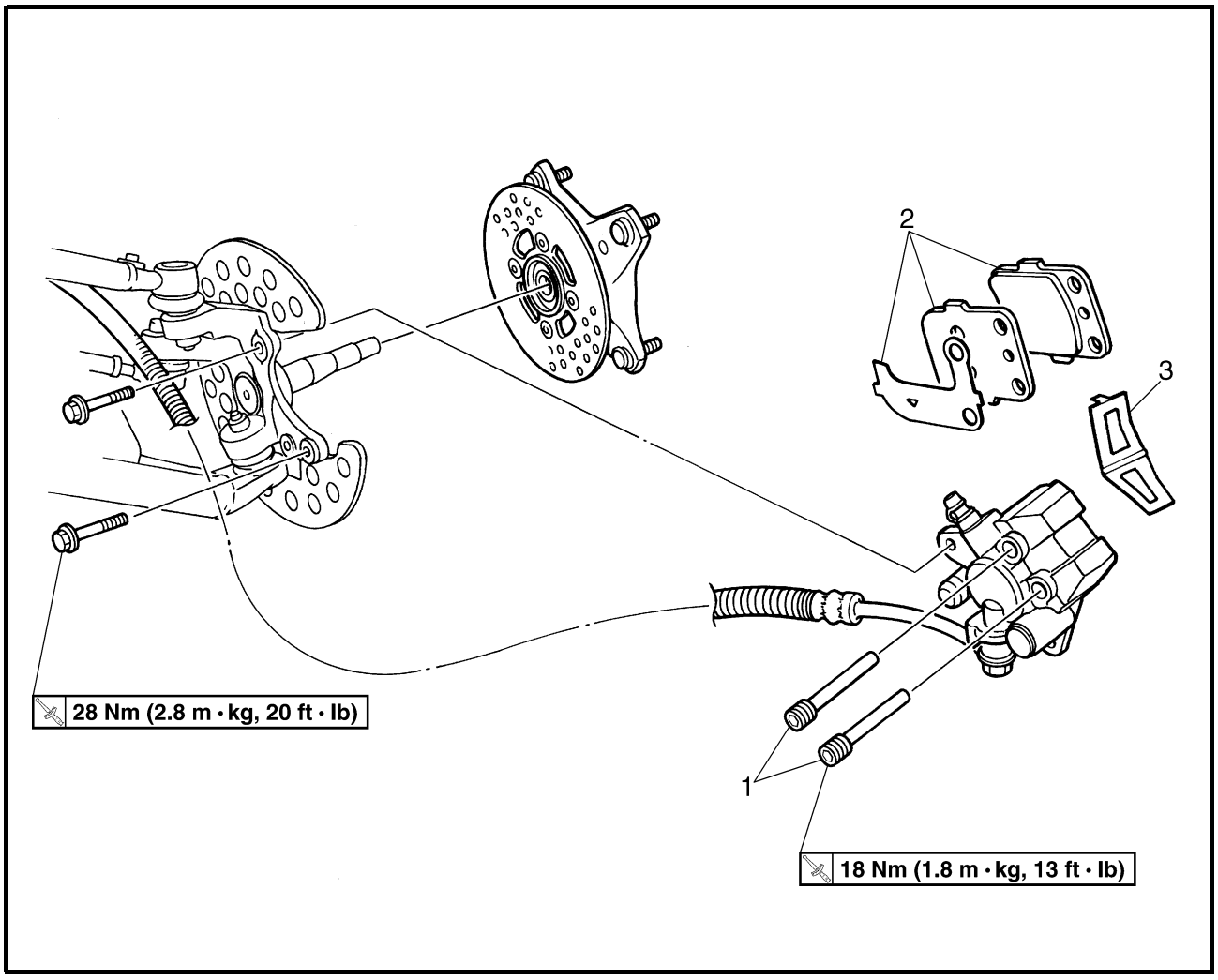

Order	Job name/Part name	Q'ty	Remarks
	Removing the front brake pad		Remove the parts in the order below.
	Front wheel/wheel hub		Refer to "FRONT WHEELS".
1	Brake pad holding bolt	2	Refer to "REPLACING THE FRONT BRAKE PAD".
2	Brake pad/pad shim	2/1	
3	Brake pad spring	1	
			For installation, reverse the removal procedure.

REAR BRAKE PADS

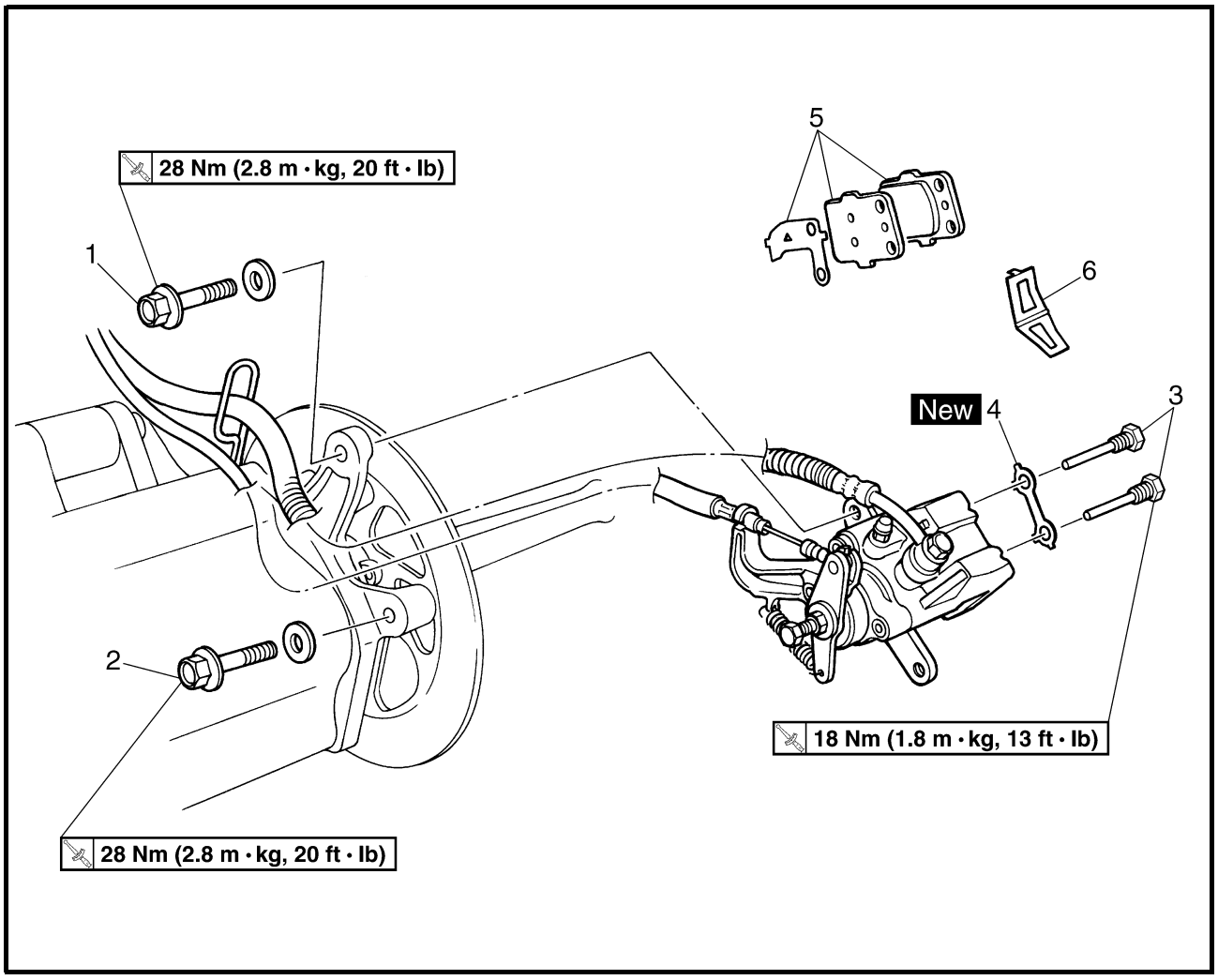

Order	Job name/Part name	Q'ty	Remarks
	Removing rear brake pad		Remove the parts in the order below.
1	Brake caliper mounting bolt	1	
2	Brake caliper mounting bolt	1	
3	Brake pad holding bolt	2	Refer to "REPLACING THE REAR BRAKE PAD".
4	Lock washer	1	
5	Brake pad/pad shim	2/1	
6	Brake pad spring	1	
			For installation, reverse the removal procedure.

CAUTION:

Disc brake components rarely require disassembly. DO NOT:

- **disassemble components unless absolutely necessary;**
- **use solvents on internal brake components;**
- **use spent brake fluid for cleaning; (use only clean brake fluid)**
- **allow brake fluid to come in contact with the eyes, as this may cause eye injury;**
- **splash brake fluid onto painted surfaces or plastic parts, as this may cause damage;**
- **disconnect any hydraulic connection, as this would require the entire brake system to be disassembled, drained, cleaned, properly filled and bled after reassembly.**

REPLACING THE FRONT BRAKE PAD

NOTE:

It is not necessary to disassemble the brake caliper and brake hose to replace the brake pads.

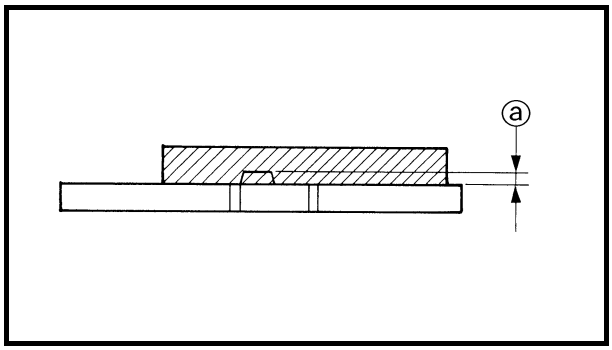

1.Remove:

- Brake pads

ⓐ Wear limit

NOTE:

Replace the brake pads as a set if either is found to be worn to the wear limit.

2.Install:

- Brake pads
- Brake pad spring

NOTE:

Always install new brake pads, brake pad shim and brake pad spring as a set.

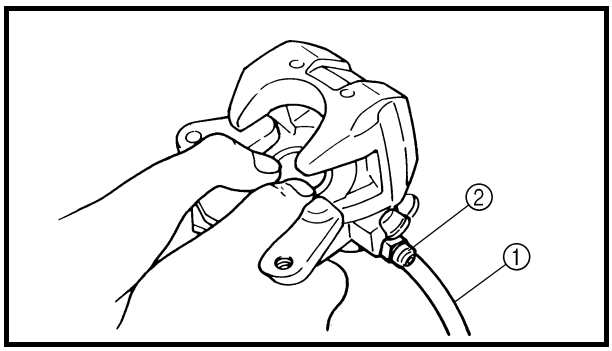

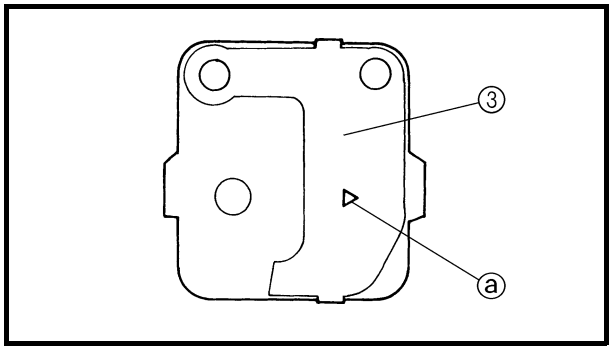

****

Installation steps:

- Connect a suitable hose ① tightly to the brake caliper bleed screw ②. Put the other end of this hose into an open container.
- Loosen the brake caliper bleed screw and, using a finger, push the caliper piston into the brake caliper.
- Tighten the brake caliper bleed screw.

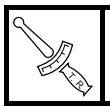	**Brake caliper bleed screw:** **6 Nm (0.6 m • kg, 4.3 ft • lb)**

- Install new brake pads, new pad shim ③ and a new brake pad spring.
- Install the holding bolts and brake caliper.

NOTE:

The arrow mark ⓐ on the pad shim must point in the direction of the disc rotation.

	**Brake pad holding bolt:** **18 Nm (1.8 m • kg, 13 ft • lb)** **Brake caliper mounting bolt:** **28 Nm (2.8 m • kg, 20 ft • lb)**

****

3. Check:
   - Brake fluid level
     Refer to “CHECKING THE BRAKE FLUID LEVEL” in CHAPTER 3.
4. Check:
   - Brake lever operation
     Soft or spongy feeling → Bleed the front brake system.
     Refer to “BLEEDING THE HYDRAULIC BRAKE SYSTEM” in CHAPTER 3.

REPLACING THE REAR BRAKE PAD

NOTE:
It is not necessary to disassemble the brake caliper and brake hose to replace the brake pads.

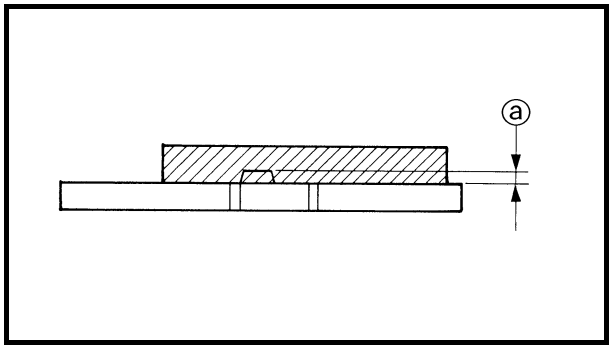

1.Remove:
- Brake pads

ⓐ Wear limit

NOTE:
Replace the brake pads as a set if either is found to be worn to the wear limit.

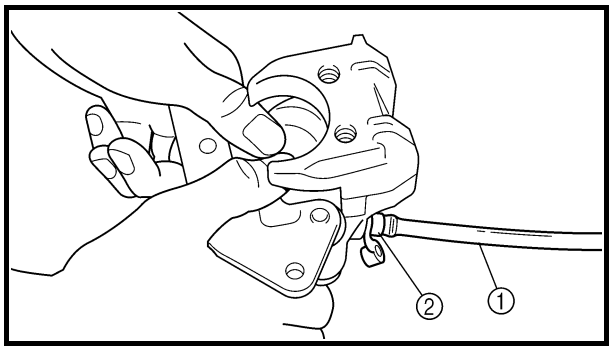

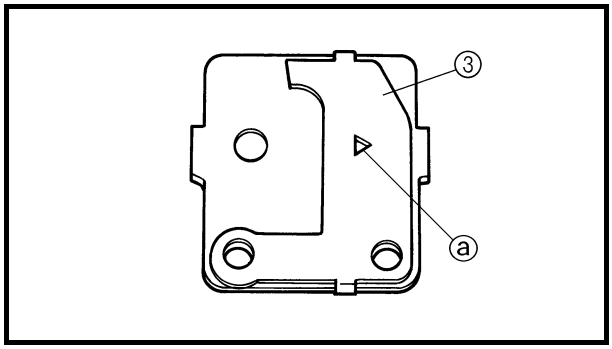

2.Install:
- Brake pads
- Brake pad spring

NOTE:
Always install new brake pads, brake pad shim and brake pad spring as a set.

****

Installation steps:
- Connect a suitable hose ① tightly to the brake caliper bleed screw ②. Put the other end of this hose into an open container.
- Loosen the brake caliper bleed screw and, using a finger, push the caliper piston into the brake caliper.
- Tighten the brake caliper bleed screw.

	Brake caliper bleed screw: **6 Nm (0.6 m • kg, 4.3 ft • lb)**

- Install new brake pads, new pad shim ③ and a new brake pad spring.
- Install a new lock washer, holding bolts and brake caliper.

NOTE:
The arrow mark ⓐ on the pad shim must point in the direction of the disc rotation.

Brake pad holding bolt:
18 Nm (1.8 m • kg, 13 ft • lb)
Brake caliper mounting bolt:
28 Nm (2.8 m • kg, 20 ft • lb)

- Bend the lock washer tabs along a flat side of the bolts.

****

3. Check:
- Brake fluid level
  Refer to “CHECKING THE BRAKE FLUID LEVEL” in CHAPTER 3.

4. Check:
- Brake pedal operation
  Soft or spongy feeling → Bleed the rear brake system.
  Refer to “BLEEDING THE HYDRAULIC BRAKE SYSTEM” in CHAPTER 3.

FRONT BRAKE MASTER CYLINDER

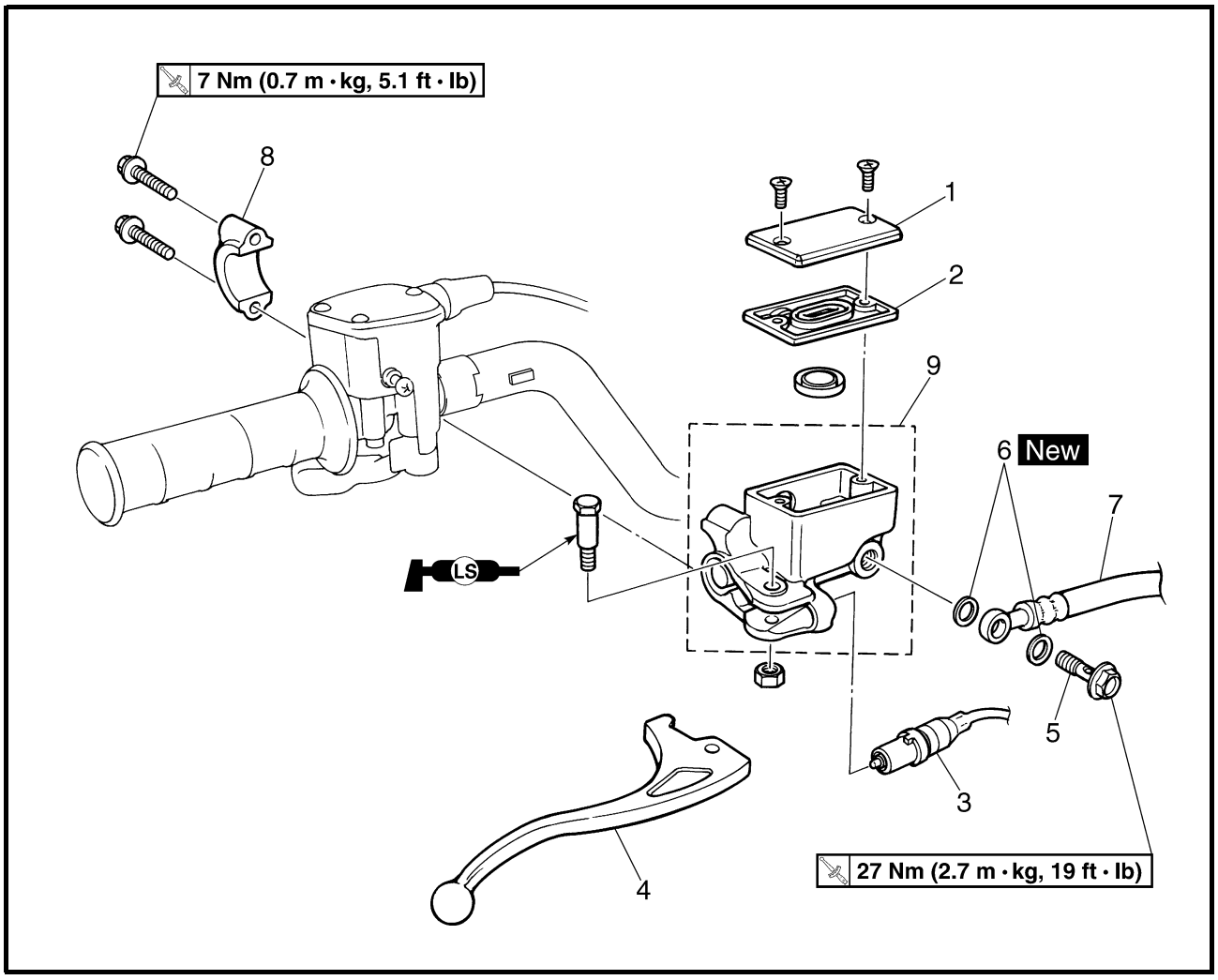

Order	Job name/Part name	Q'ty	Remarks
	Removing front brake master cylinder		Remove the parts in the order below.
	Brake fluid		Drain.
1	Brake fluid reservoir cap	1	
2	Brake fluid reservoir diaphragm	1	
3	Front brake switch	1	
4	Brake lever	1	
5	Union bolt	1	
6	Copper washer	2	Refer to "INSTALLING THE FRONT BRAKE MASTER CYLINDER".
7	Brake hose	1	
8	Brake master cylinder bracket	1	
9	Brake master cylinder	1	
			For installation, reverse the removal procedure.

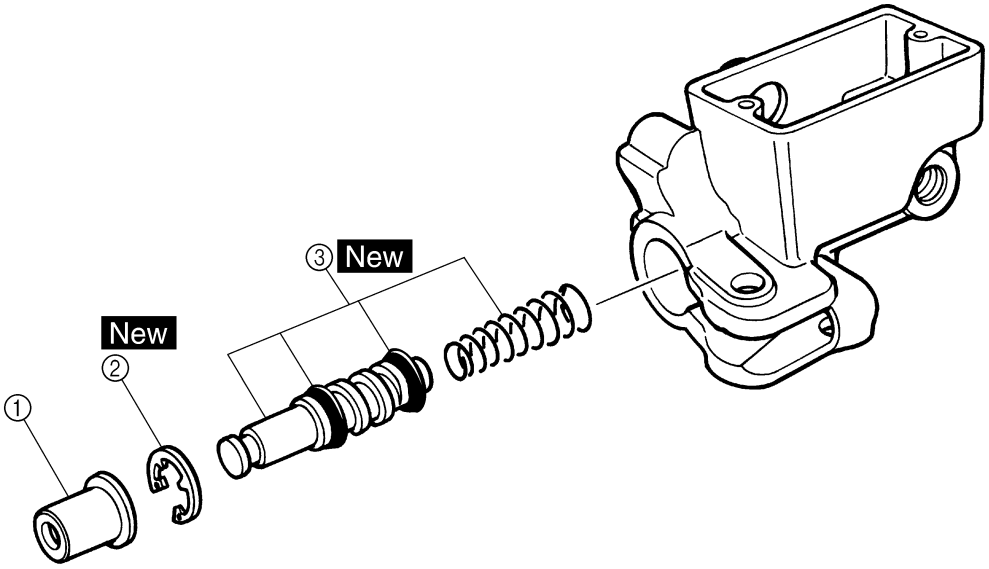

Order	Job name/Part name	Q'ty	Remarks
	Disassembling the front brake master cylinder		Remove the parts in the order below.
①	Dust boot	1	Refer to "ASSEMBLING THE FRONT AND REAR BRAKE MASTER CYLINDER".
②	Circlip	1	
③	Brake master cylinder kit	1	
			For assembly, reverse the disassembly procedure.

REAR BRAKE MASTER CYLINDER

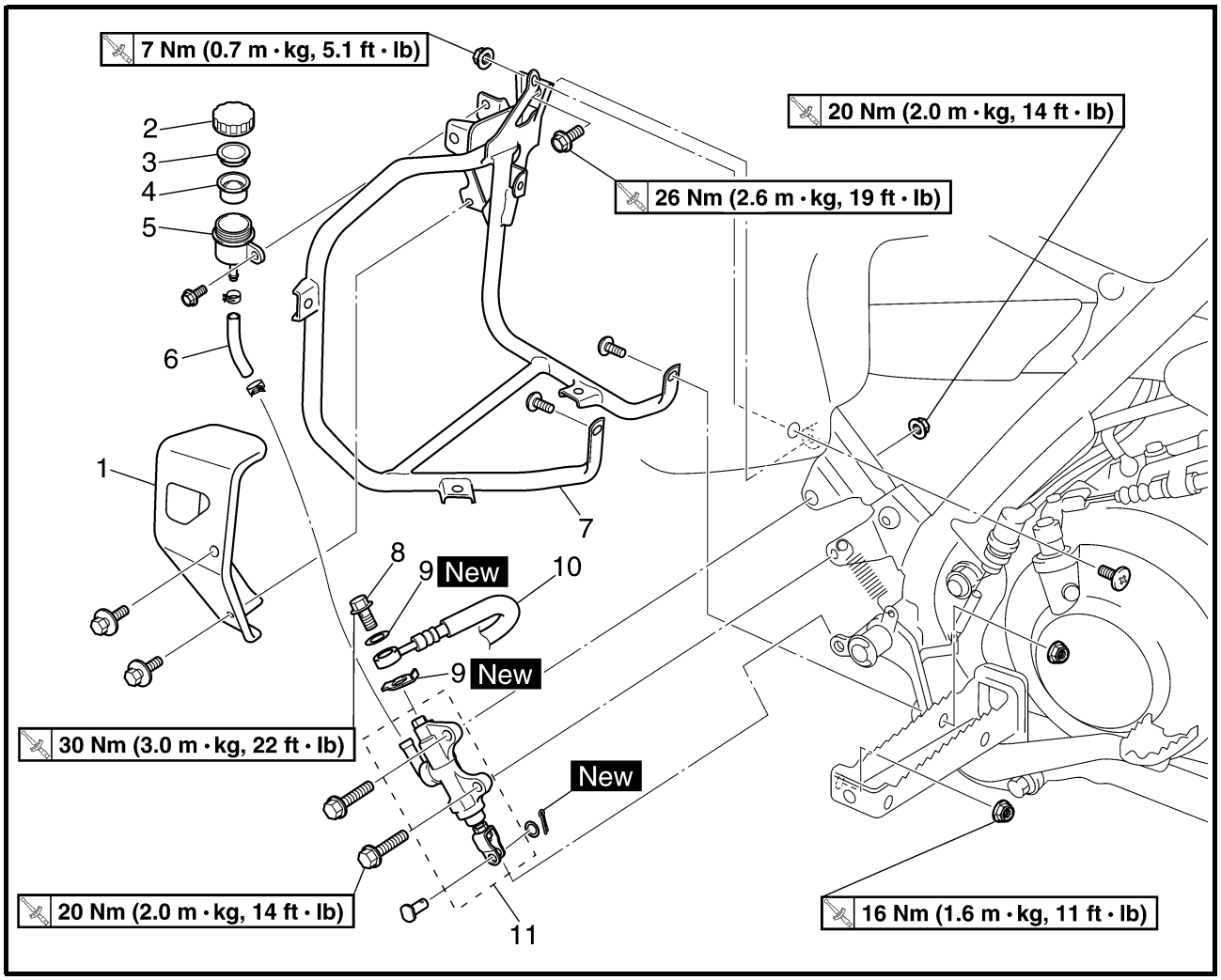

Order	Job name/Part name	Q'ty	Remarks
	Removing the rear brake master cylinder		Remove the parts in the order below.
	Right footrest guard		Refer to "SEAT, FENDERS AND FUEL TANK" in CHAPTER 3.
	Brake fluid		Drain.
1	Brake fluid reservoir cover	1	
2	Brake fluid reservoir cap	1	
3	Brake fluid reservoir diaphragm holder	1	
4	Brake fluid reservoir diaphragm	1	
5	Brake fluid reservoir	1	
6	Brake fluid reservoir hose	1	
7	Right footrest guard bracket	1	

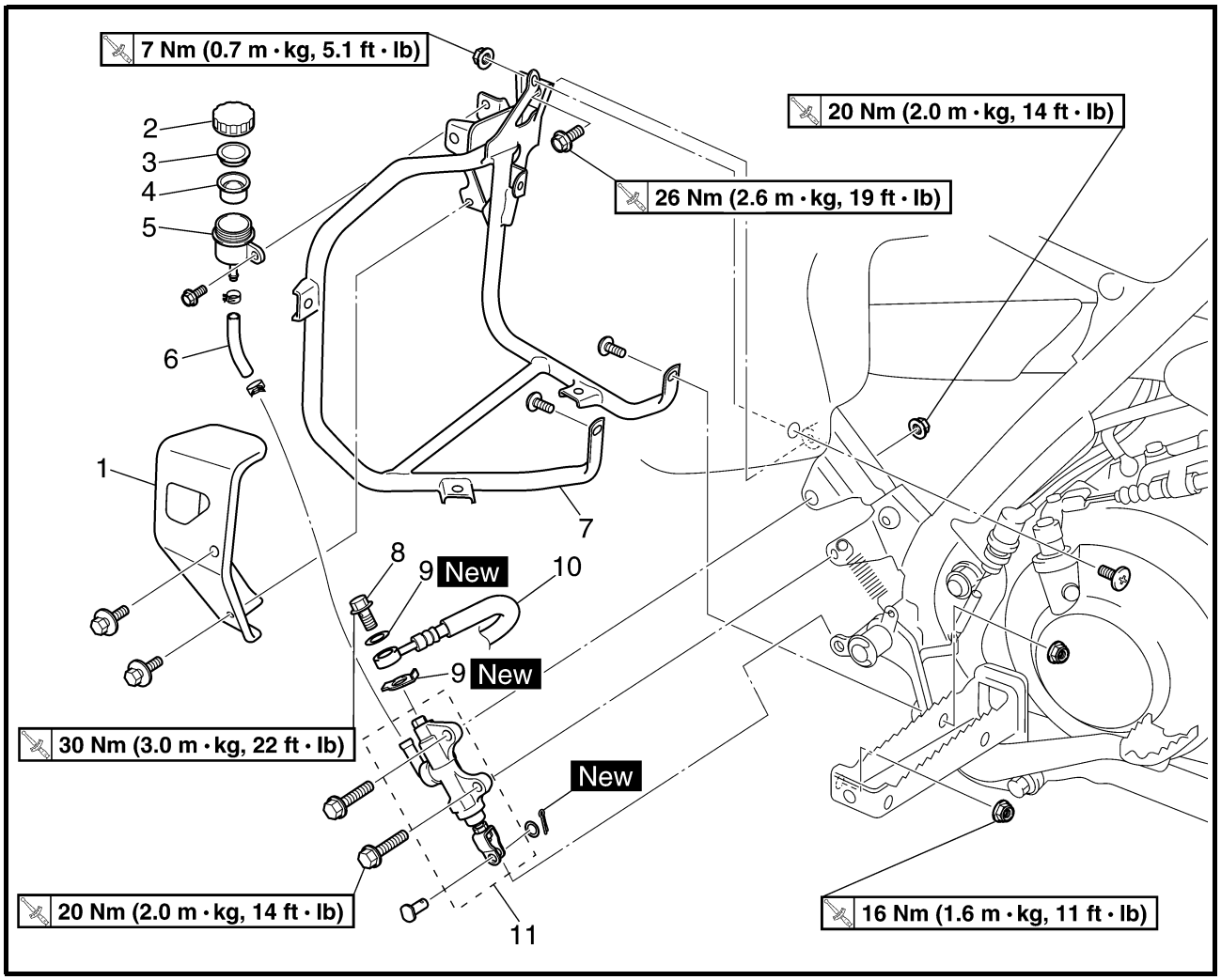

Order	Job name/Part name	Q'ty	Remarks
8	Union bolt	1	Refer to "INSTALLING THE REAR BRAKE MASTER CYLINDER".
9	Copper washer	2	
10	Brake hose	1	
11	Brake master cylinder	1	
			For installation, reverse the removal procedure.

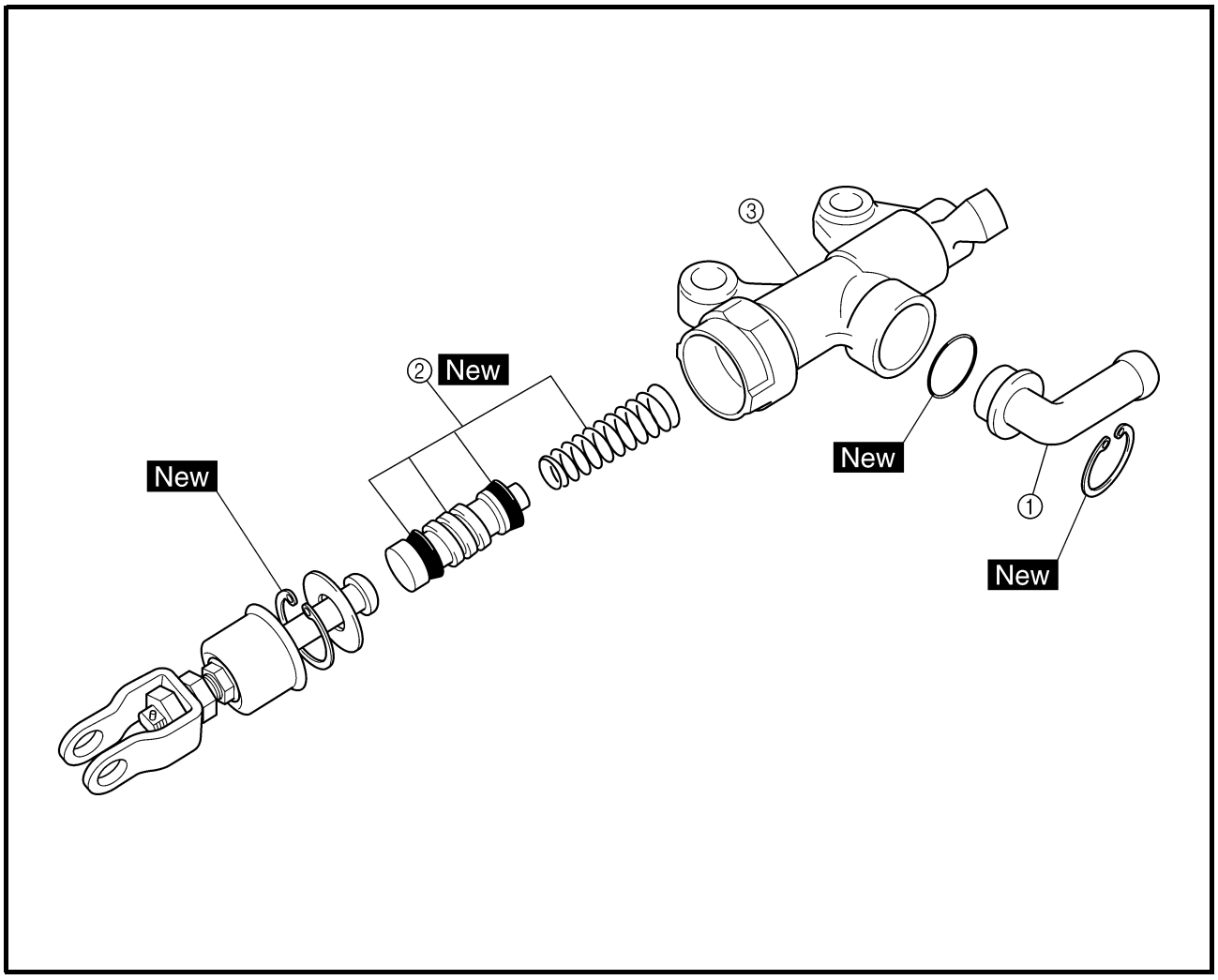

Order	Job name/Part name	Q'ty	Remarks
	Disassembling the rear brake master cylinder		Remove the parts in the order below.
①	Hose joint	1	
②	Brake master cylinder kit	1	Refer to "ASSEMBLING THE FRONT AND REAR BRAKE MASTER CYLINDER".
③	Brake master cylinder	1	
			For assembly, reverse the disassembly procedure.

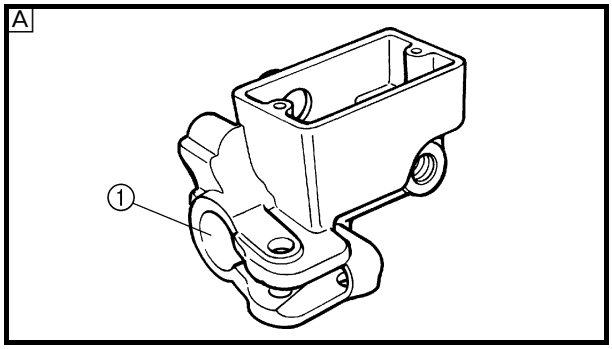

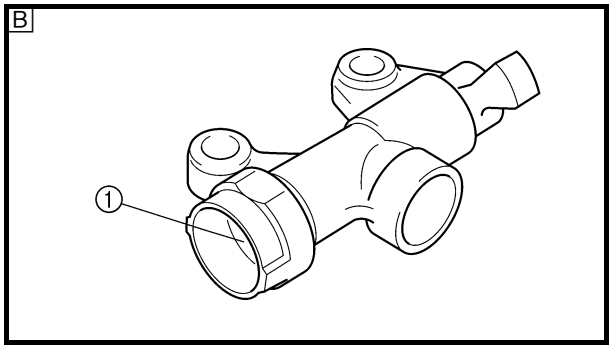

CHECKING THE MASTER CYLINDER

1.Check:
- Brake master cylinder ①
  Wear/scratches → Replace the brake master cylinder assembly.
- Brake master cylinder body
  Cracks/damage → Replace.
- Brake fluid delivery passage
  (brake master cylinder body)
  Blockage → Blow out with compressed air.

A Front
B Rear

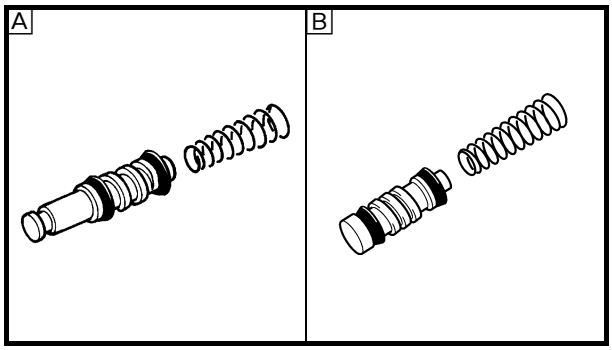

2.Check:
- Brake master cylinder kit
  Scratches/wear/damage → Replace as a set.

A Front
B Rear

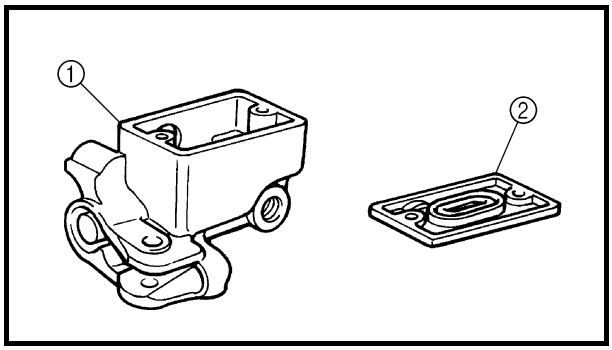

3.Check:
- Front brake master cylinder reservoir ①
- Front brake master cylinder reservoir diaphragm ②
  Cracks/damage → Replace.

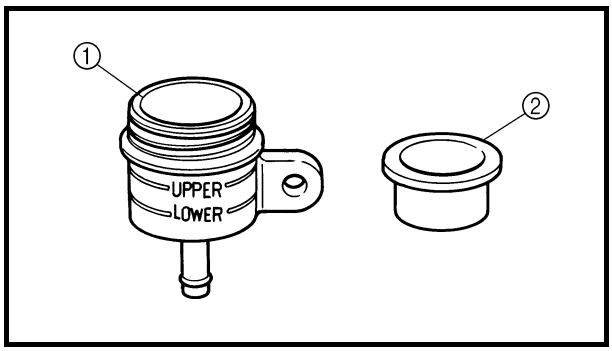

4.Check:
- Rear brake fluid reservoir ①
- Rear brake fluid reservoir diaphragm ②
  Cracks/damage → Replace.

EB702060

ASSEMBLING THE FRONT AND REAR BRAKE MASTER CYLINDER

WARNING

- **All internal brake components should be cleaned and lubricated with new brake fluid only before installation.**

Recommended brake fluid:
DOT 4

- **Whenever a master cylinder is disassembled, replace the piston seals and dust seals.**

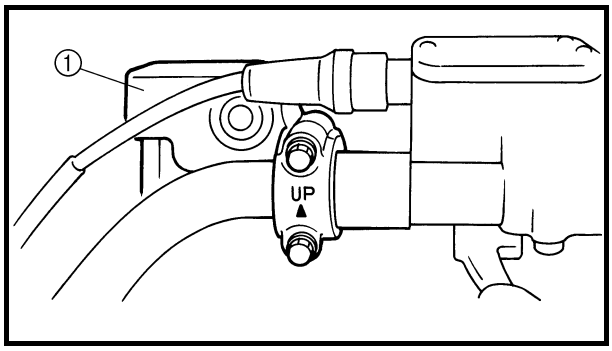

INSTALLING THE FRONT BRAKE MASTER CYLINDER

1.Install:

- Brake master cylinder ①

7 Nm (0.7 m • kg, 5.1 ft • lb)

NOTE:

The "UP" mark on the brake master cylinder bracket should face up.

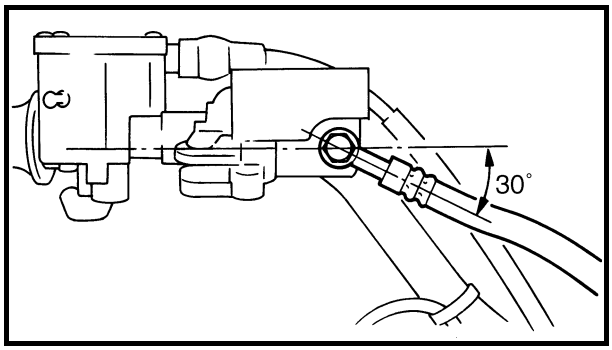

2.Install:

- Copper washers New
- Brake hose
- Union bolt **27 Nm (2.7 m • kg, 19 ft • lb)**

NOTE:

- Tighten the union bolt while holding the brake hose as shown.
- Turn the handlebar to the left and to the right to check that the brake hose does not touch other parts (throttle cable, wire harness, leads, etc.). Correct if necessary.

WARNING

Proper brake hose routing is essential to insure safe machine operation. Refer to "CABLE ROUTING".

3.Fill:
- Brake fluid reservoir

Recommended brake fluid:
DOT 4

CAUTION:

Brake fluid may damage painted surfaces or plastic parts. Always clean up spilled brake fluid immediately.

WARNING

- **Use only the designated quality brake fluid: Other brake fluids may deteriorate the rubber seals, causing leakage and poor brake performance.**
- **Refill with the same type of brake fluid: Mixing brake fluids may result in a harmful chemical reaction and lead to poor brake performance.**
- **Be careful that water does not enter the brake master cylinder when refilling. Water will significantly lower the boiling point of the brake fluid and may result in vapor lock.**

4.Air bleed:
- Brake system
  Refer to “BLEEDING THE HYDRAULIC BRAKE SYSTEM” in CHAPTER 3.

5.Check:
- Brake fluid level
  Brake fluid level is below the “LOWER” level line → Add the recomended brake fluid to the proper level.
  Refer to “CHECKING THE BRAKE FLUID LEVEL” in CHAPTER 3.

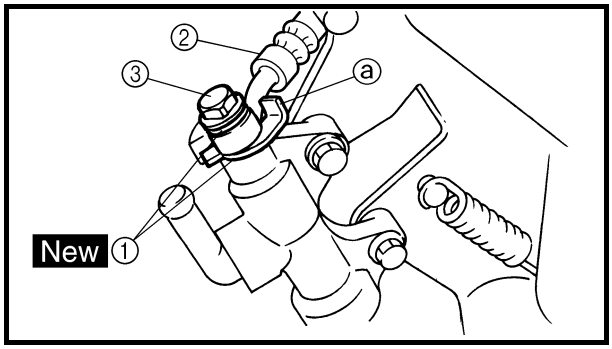

INSTALLING THE REAR BRAKE MASTER CYLINDER

1.Install:
- Copper washers ① New
- Brake hose ②
- Union bolt ③ **30 Nm (3.0 m • kg, 22 ft • lb)**

CAUTION:

When installing the brake hose onto the brake master cylinder, make sure the brake pipe touches the projection ⓐ as shown.

WARNING

Proper brake hose routing is essential to insure safe machine operation. Refer to "CABLE ROUTING".

2.Fill:
- Brake fluid reservoir

Recommended brake fluid:
DOT 4

CAUTION:

Brake fluid may damage painted surfaces or plastic parts. Always clean up spilled brake fluid immediately.

WARNING

- **Use only the designated quality brake fluid: Other brake fluids may deteriorate the rubber seals, causing leakage and poor brake performance.**
- **Refill with the same type of brake fluid: Mixing brake fluids may result in a harmful chemical reaction and lead to poor brake performance.**
- **Be careful that water does not enter the brake master cylinder when refilling. Water will significantly lower the boiling point of the brake fluid and may result in vapor lock.**

3. Air bleed:
- Brake system
  Refer to “BLEEDING THE HYDRAULIC BRAKE SYSTEM” in CHAPTER 3.

4. Check:
- Brake fluid level
  Brake fluid level is below the “LOWER” level line → Add the recommended brake fluid to the proper level.
  Refer to “CHECKING THE BRAKE FLUID LEVEL” in CHAPTER 3.

FRONT BRAKE CALIPERS

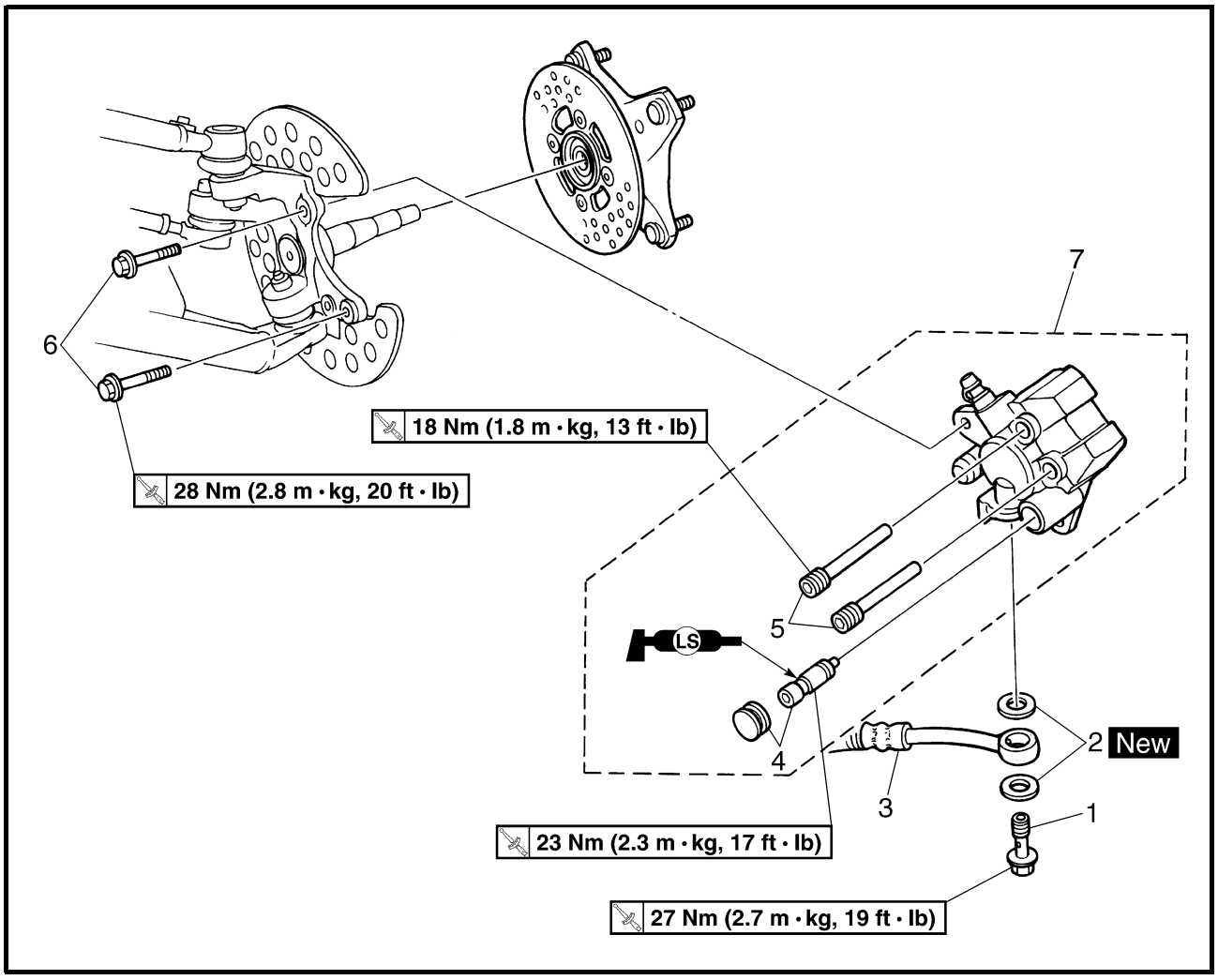

Order	Job name/Part name	Q'ty	Remarks
	Removing the front brake caliper		Remove the parts in the order below.
	Brake fluid		Drain.
	Front wheel		Refer to "FRONT WHEELS".
1	Union bolt	1	
2	Copper washer	2	
3	Brake hose	1	Disconnect. Refer to "INSTALLING THE FRONT BRAKE CALIPER".
4	Cap/retaining bolt	1/1	Loosen.
5	Brake pad holding bolt	2	Loosen.
6	Brake caliper mounting bolt	2	
7	Brake caliper assembly	1	
			For installation, reverse the removal procedure.

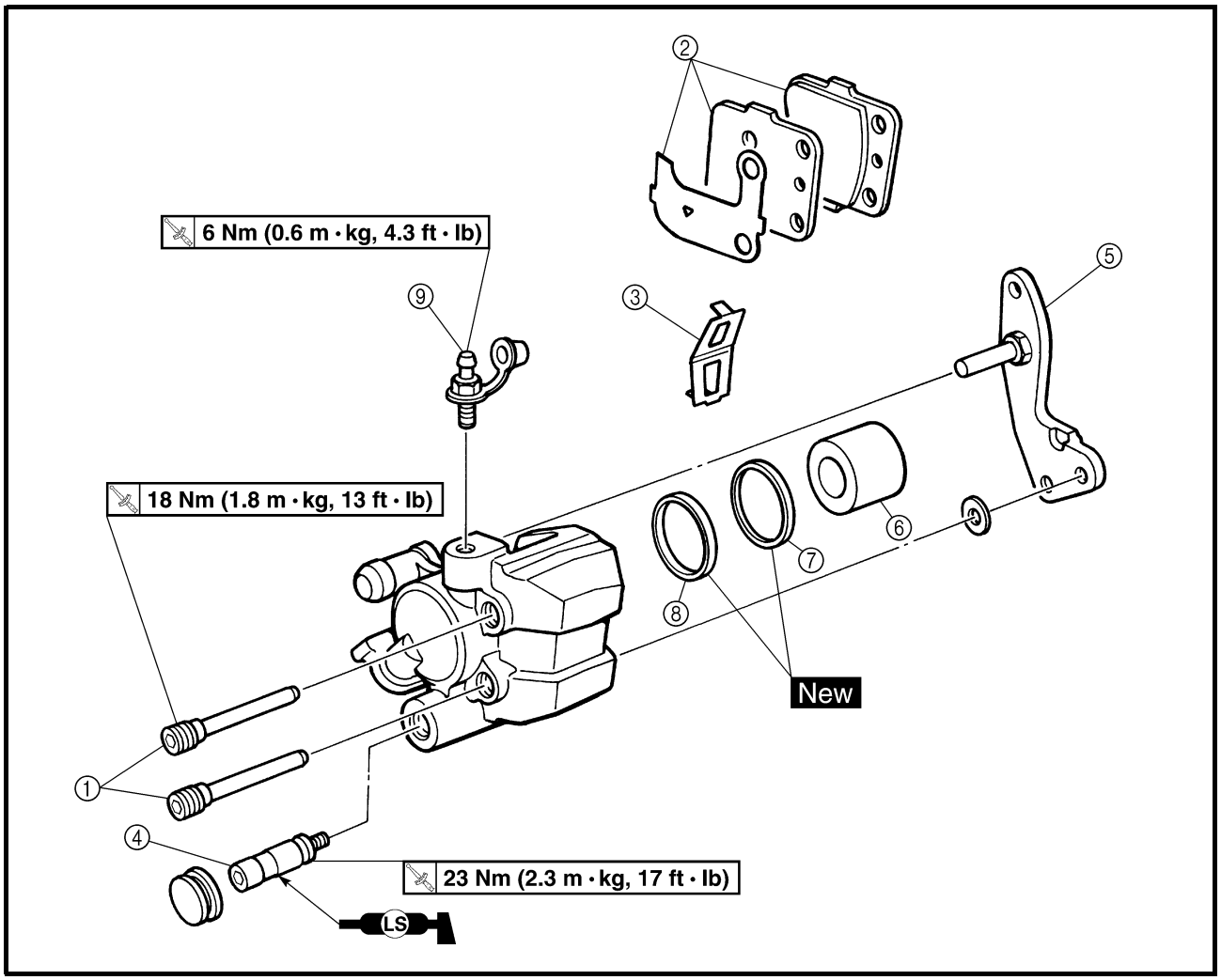

Order	Job name/Part name	Q'ty	Remarks
	Disassembling the front brake caliper		Remove the parts in the order below.
①	Brake pad holding bolt	2	
②	Brake pad/pad shim	2/1	
③	Brake pad spring	1	
④	Retaining bolt	1	
⑤	Caliper bracket	1	
⑥	Brake caliper piston	1	Refer to "DISASSEMBLING THE FRONT AND REAR BRAKE CALIPER/ASSEMBLING THE FRONT BRAKE CALIPER".
⑦	Dust seal	1	
⑧	Caliper piston seal	1	
⑨	Bleed screw	1	
			For assembly, reverse the disassembly procedure.

REAR BRAKE CALIPER

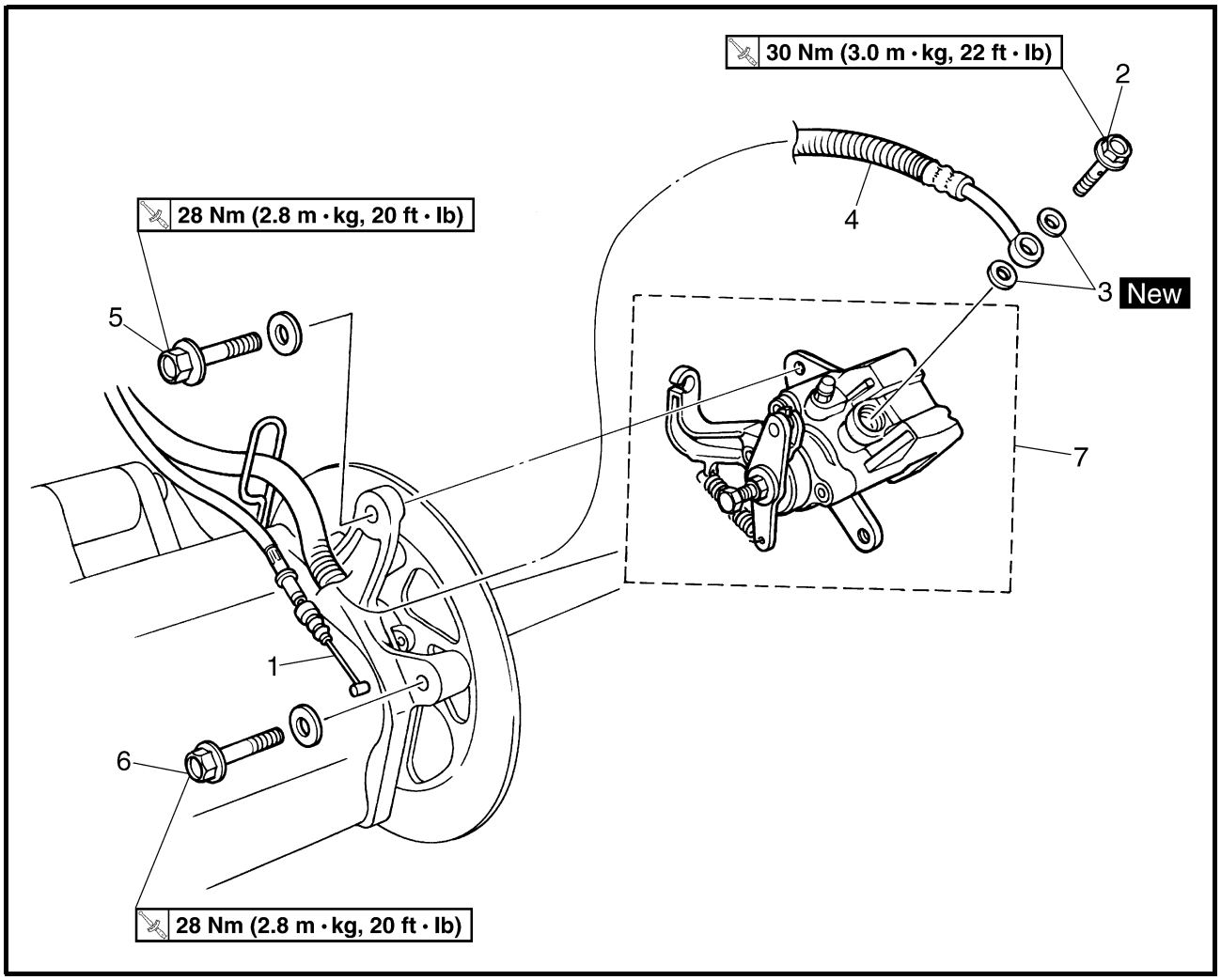

Order	Job name/Part name	Q'ty	Remarks
	Removing the rear brake caliper		Remove the parts in the order below.
	Brake fluid		Drain.
1	Parking brake cable	1	Disconnect.
2	Union bolt	1	Disconnect. Refer to "INSTALLING THE REAR BRAKE CALIPER".
3	Copper washer	2	
4	Brake hose	1	
5	Brake caliper mounting bolt	1	
6	Brake caliper mounting bolt	1	
7	Brake caliper assembly	1	
			For installation, reverse the removal procedure.

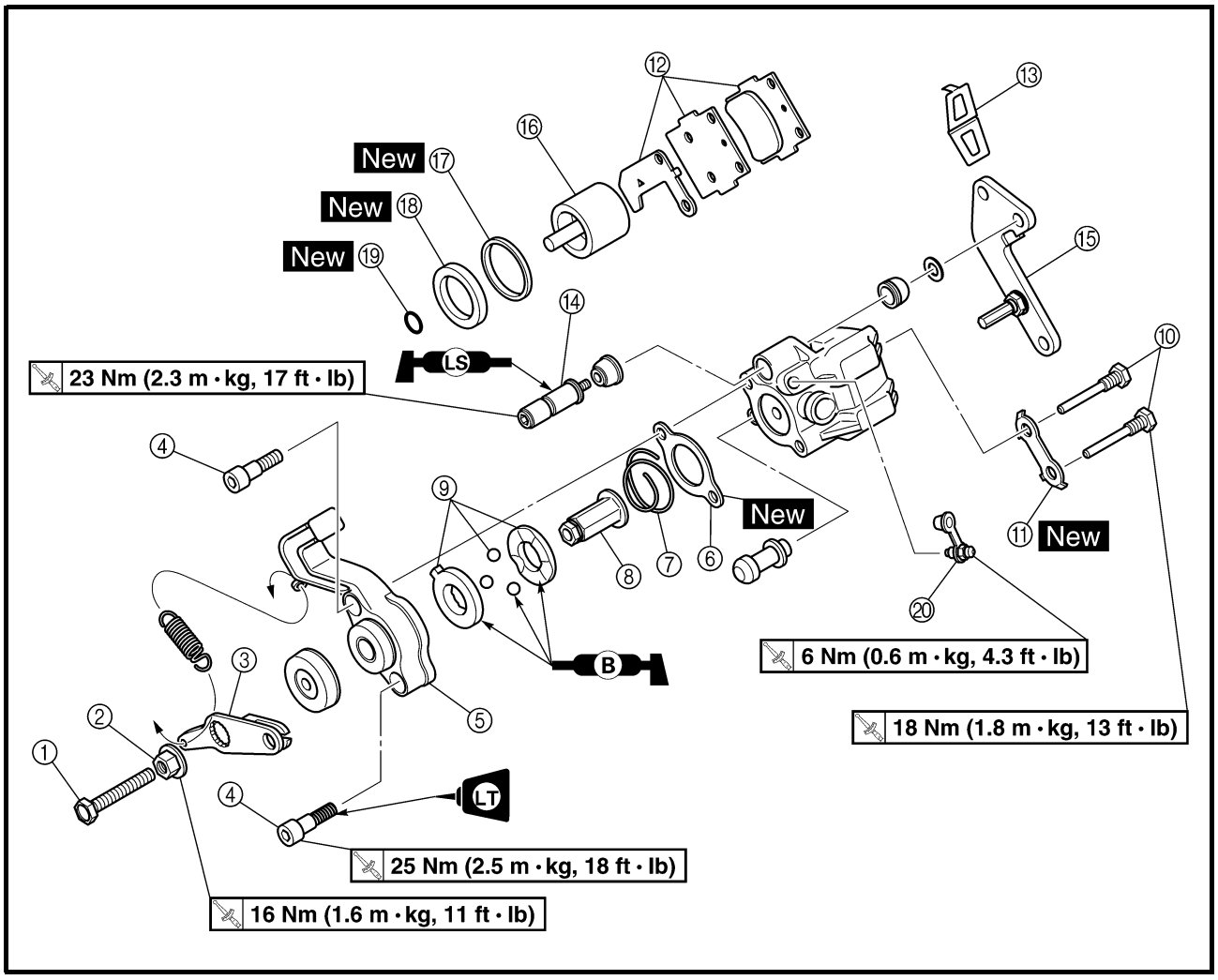

Order	Job name/Part name	Q'ty	Remarks
	Disassembling the rear brake caliper		Remove the parts in the order below.
①	Adjusting bolt	1	
②	Locknut	1	
③	Parking brake lever	1	
④	Parking brake case mounting bolt	2	
⑤	Parking brake case	1	
⑥	Gasket	1	
⑦	Spring	1	
⑧	Nut	1	
⑨	Bearing	1	Refer to "ASSEMBLING THE REAR BRAKE CALIPER".
⑩	Brake pad holding bolt	2	
⑪	Lock washer	1	

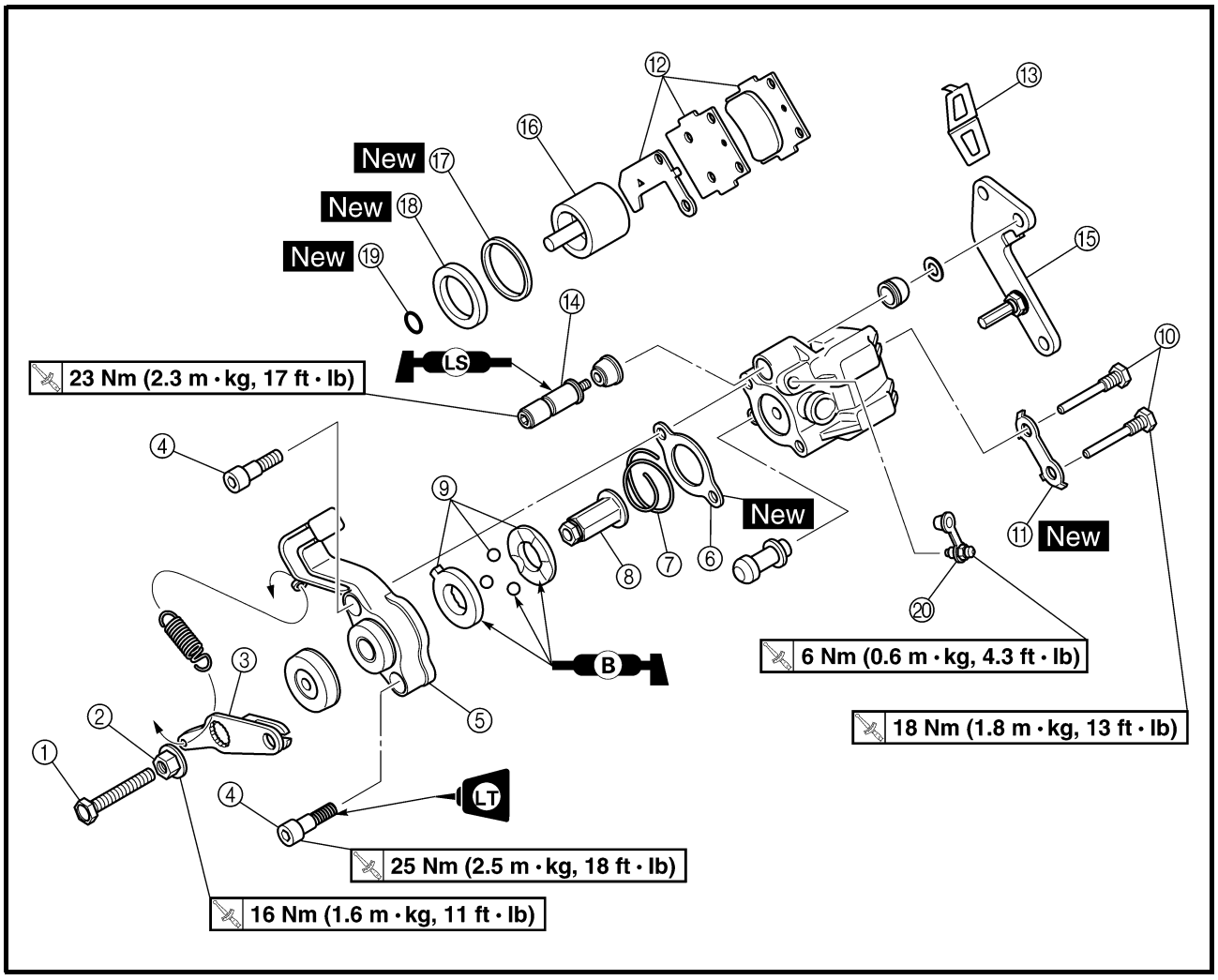

Order	Job name/Part name	Q'ty	Remarks
⑫	Brake pad/pad shim	2/1	
⑬	Brake pad spring	1	
⑭	Retaining bolt	1	
⑮	Caliper bracket	1	
⑯	Brake caliper piston	1	Refer to "DISASSEMBLING THE FRONT AND REAR BRAKE CALIPER/ASSEMBLING THE REAR BRAKE CALIPER".
⑰	Dust seal	1	
⑱	Caliper piston seal	1	
⑲	O-ring	1	
⑳	Bleed screw	1	
			For assembly, reverse the disassembly procedure.

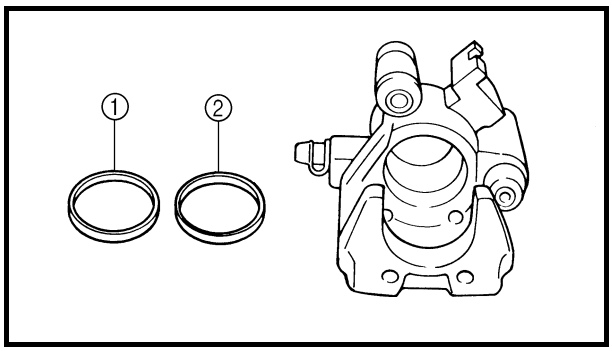

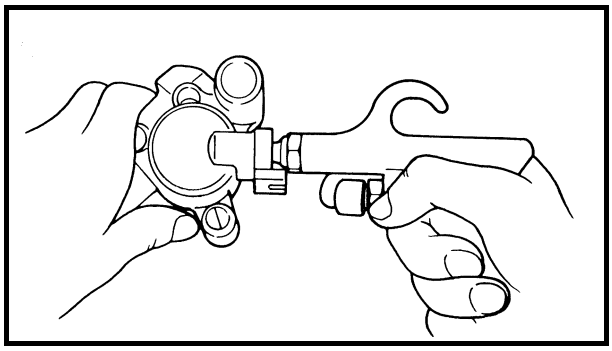

DISASSEMBLING THE FRONT AND REAR BRAKE CALIPER

1.Remove:
- Brake caliper piston
- Dust seal ①
- Caliper piston seal ②

****

Removal steps:

- Blow compressed air into the hose joint opening to force out the caliper piston from the brake caliper body.

⚠ WARNING

- **Never try to pry out the caliper piston.**
- **Cover the caliper piston with a rag. Be careful not to get injured when the piston is expelled from the master cylinder.**

- Remove the caliper piston seals.

****

EB702040

CHECKING THE FRONT AND REAR BRAKE CALIPER

Recommended brake component replacement schedule:	
Brake pads	**As required**
Piston seal, dust seal	**Every two years**
Brake hoses	**Every two years**
Brake fluid	**Replace when brakes are disassembled.**

⚠ WARNING

All internal brake components should be cleaned in new brake fluid only. Do not use solvents as they will cause seals to swell and distort.

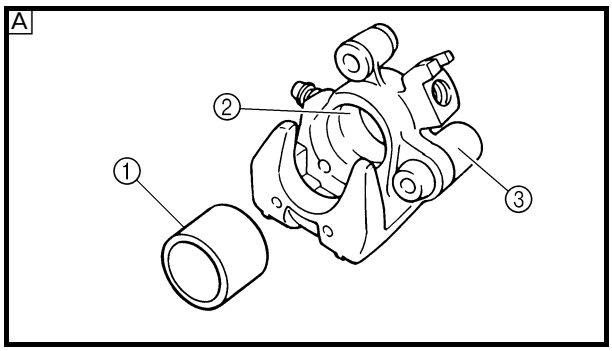

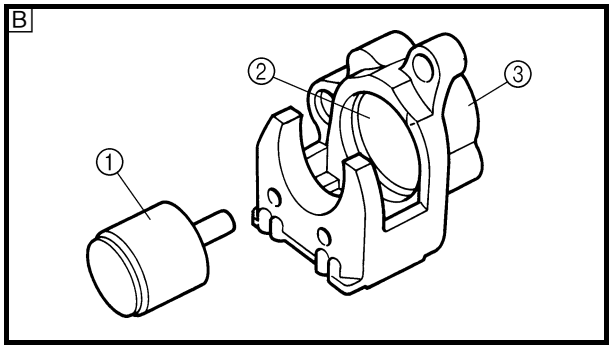

1.Check:
- Brake caliper piston ①
  Scratches/rust/wear → Replace the brake caliper assembly.
- Brake caliper cylinder ②
  Wear/scratches → Replace the brake caliper assembly.
- Brake caliper body ③
  Cracks/damage → Replace.
- Brake fluid delivery passage (brake caliper body)
  Blockage → Blow out with compressed air.

⚠ WARNING

Replace the caliper piston seal and dust seal whenever the brake caliper is disassembled.

A Front
B Rear

ASSEMBLING THE FRONT BRAKE CALIPER

⚠ WARNING

- **All internal brake components should be cleaned and lubricated with new brake fluid only before installation.**

Recommended brake fluid:
DOT 4

- **Replace the caliper piston seal whenever a brake caliper is disassembled.**

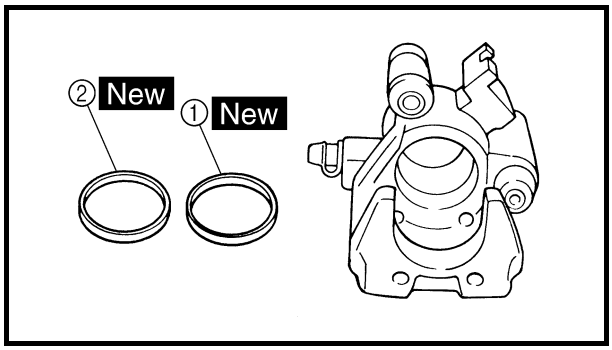

1.Install:
- Caliper piston seal ① New
- Dust seal ② New

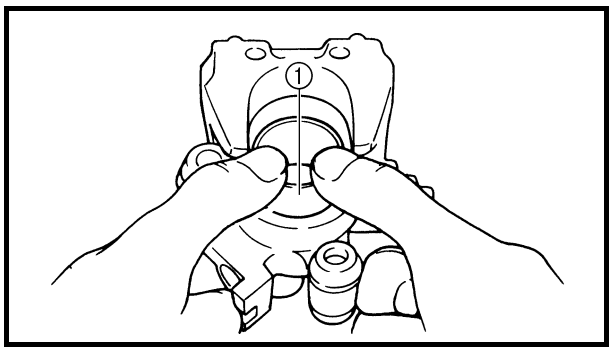

2.Install:
- Brake caliper piston ①

ASSEMBLING THE REAR BRAKE CALIPER

WARNING

- **All internal brake components should be cleaned and lubricated with new brake fluid only before installation.**

Recommended brake fluid:
DOT 4

- **Replace the caliper piston seal whenever a brake caliper is disassembled.**

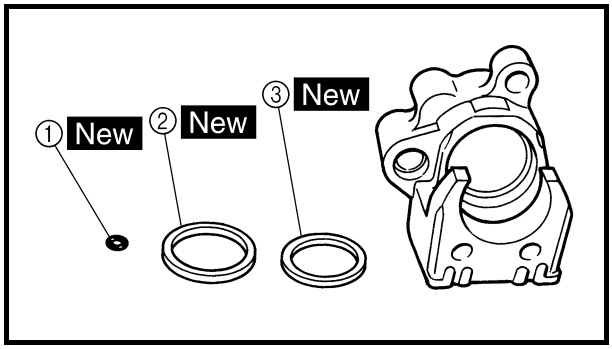

1. Install:
- O-ring ① New
- Caliper piston seal ② New
- Dust seal ③ New

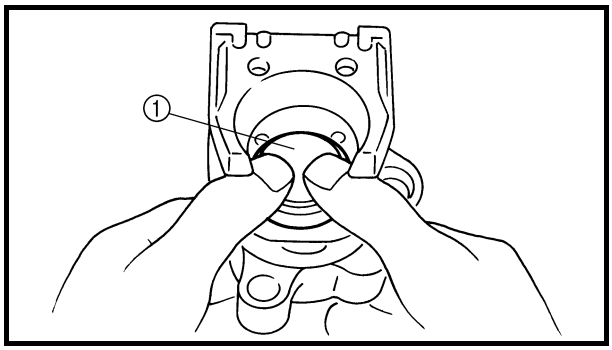

2. Install:
- Brake caliper piston ①

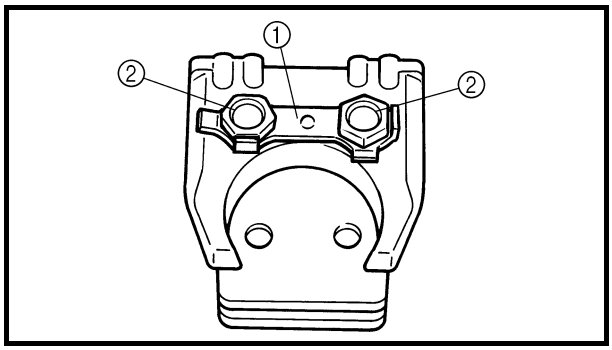

3. Install:
- Lock washer ① New
- Brake pad holding bolts ②

18 Nm (1.8 m • kg, 13 ft • lb)

4. Bend the lock washer tabs along a flat side of the bolts.

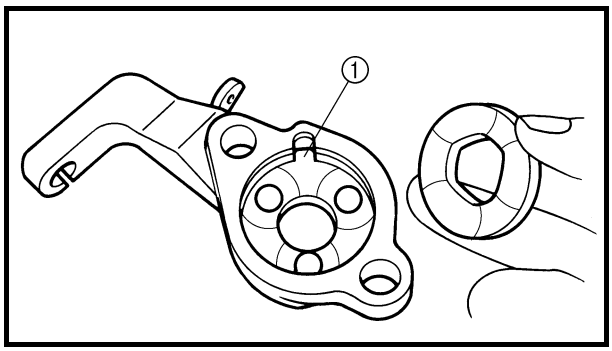

5. Mesh the bearing race tab ① with parking brake case slit.

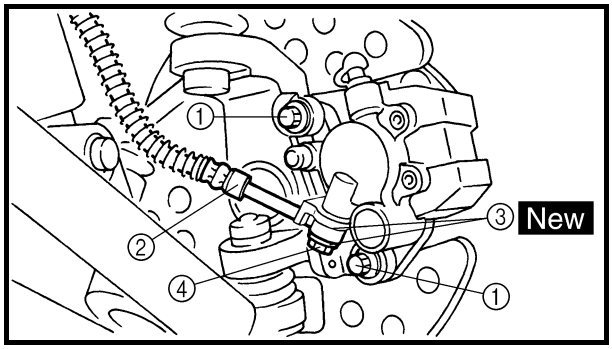

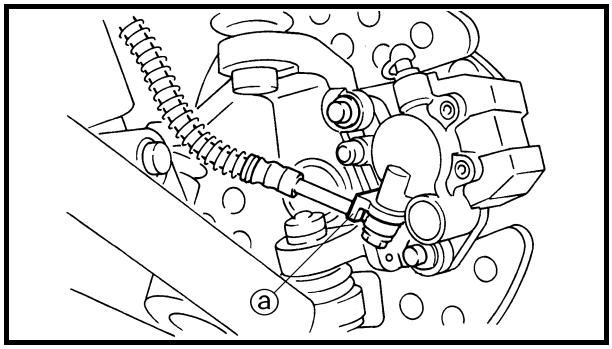

INSTALLING THE FRONT BRAKE CALIPER

1.Install:

- Brake caliper assembly
- Brake caliper mounting bolts ①

	28 Nm (2.8 m • kg, 20 ft • lb)

- Brake hose ②
- Copper washers ③ New
- Union bolt ④

	27 Nm (2.7 m • kg, 19 ft • lb)

CAUTION:

When installing the brake hose on the brake caliper, make sure that the brake pipe touches the projection ⓐ on the brake caliper.

⚠ WARNING

Proper brake hose routing is essential to insure safe motorcycle operation. Refer to "CABLE ROUTING".

2.Fill:

- Brake reservoir

	Recommended brake fluid: DOT 4

CAUTION:

Brake fluid may damage painted surfaces or plastic parts. Always clean up spilled brake fluid immediately.

⚠ WARNING

- **Use only the designated quality brake fluid: Other brake fluids may deteriorate the rubber seals, causing leakage and poor brake performance.**
- **Refill with the same type of brake fluid: Mixing brake fluids may result in a harmful chemical reaction and lead to poor brake performance.**
- **Be careful that water does not enter the master cylinder when refilling. Water will significantly lower the boiling point of the brake fluid and may result in vapor lock.**

3.Air bleed

- Brake system
  Refer to "BLEEDING THE HYDRAULIC BRAKE SYSTEM" in CHAPTER 3.

4.Check:
- Brake fluid level
  Brake fluid level is below the “LOWER” level line → Add the recommended brake fluid to the proper level.
  Refer to “CHECKING THE BRAKE FLUID LEVEL” in CHAPTER 3.

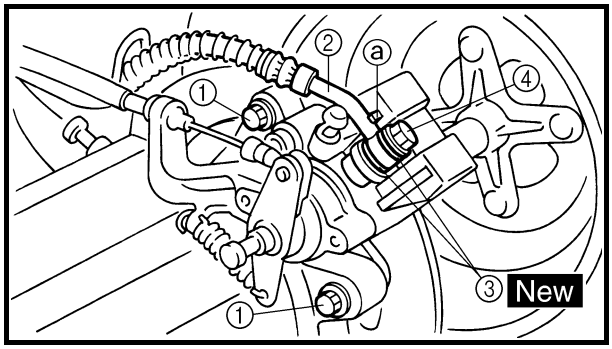

INSTALLING THE REAR BRAKE CALIPER

1.Install:
- Brake caliper assembly
- Brake caliper mounting bolts ①
  28 Nm (2.8 m • kg, 20 ft • lb)
- Brake hose ②
- Copper washers ③ New
- Union bolt ④ **30 Nm (3.0 m • kg, 22 ft • lb)**

CAUTION:

When installing the brake hose on the brake caliper, make sure that the brake pipe touches the projection ⓐ on the brake caliper.

⚠ WARNING

Proper brake hose routing is essential to insure safe motorcycle operation. Refer to “CABLE ROUTING”.

2.Fill:
- Brake reservoir

Recommended brake fluid:
DOT 4

CAUTION:

Brake fluid may damage painted surfaces or plastic parts. Always clean up spilled brake fluid immediately.

WARNING

- **Use only the designated quality brake fluid: Other brake fluids may deteriorate the rubber seals, causing leakage and poor brake performance.**
- **Refill with the same type of brake fluid: Mixing brake fluids may result in a harmful chemical reaction and lead to poor brake performance.**
- **Be careful that water does not enter the master cylinder when refilling. Water will significantly lower the boiling point of the brake fluid and may result in vapor lock.**

3. Air bleed
- Brake system
  Refer to “BLEEDING THE HYDRAULIC BRAKE SYSTEM” in CHAPTER 3.

4. Check:
- Brake fluid level
  Brake fluid level is below the “LOWER” level line → Add the recommended brake fluid to the proper level.
  Refer to “CHECKING THE BRAKE FLUID LEVEL” in CHAPTER 3.

5. Adjust:
- Parking brake cable end length
  Refer to “ADJUSTING THE PARKING BRAKE” in CHAPTER 3.

STEERING SYSTEM

HANDLEBAR

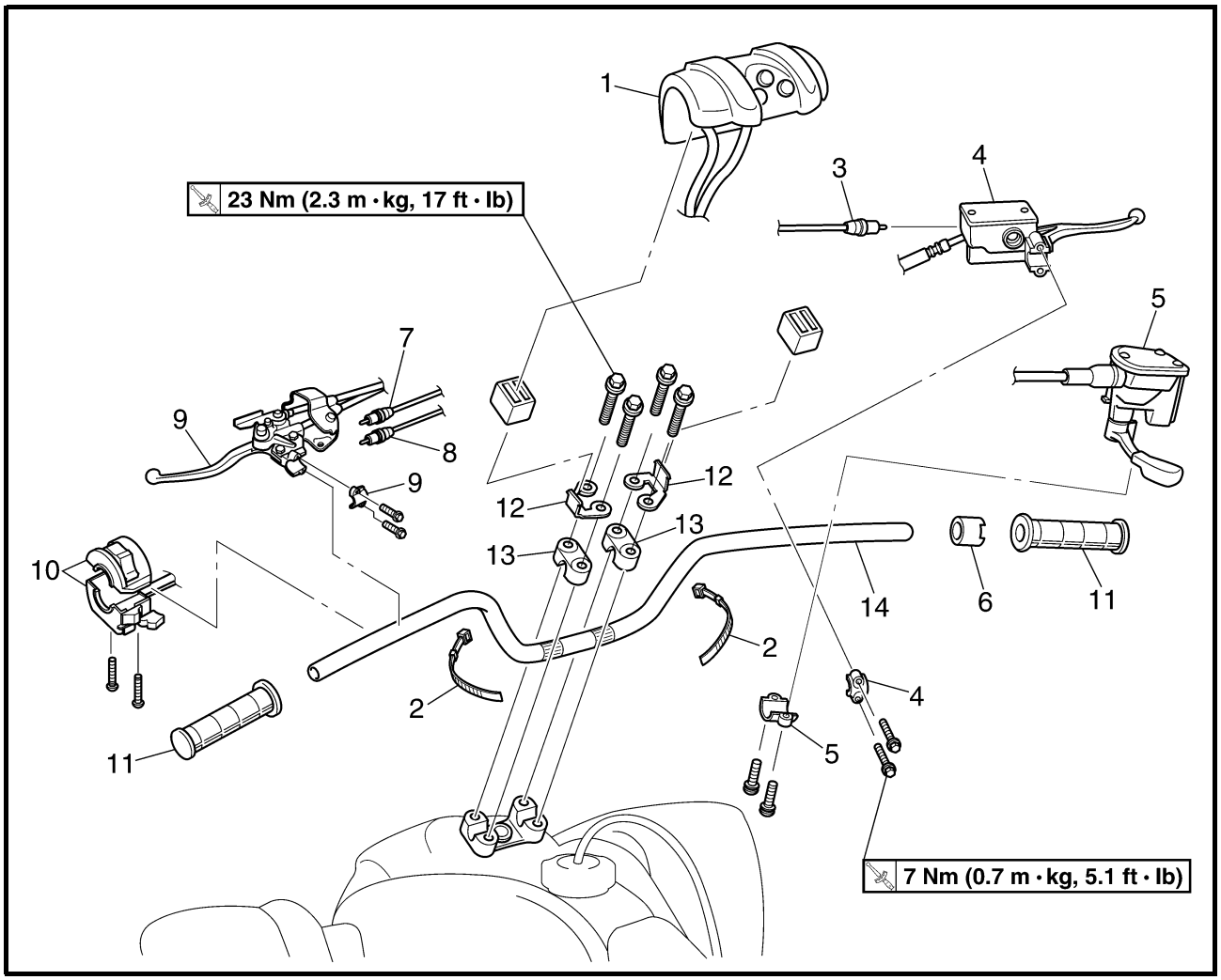

Order	Job name/Part name	Q'ty	Remarks
	Removing the handlebar		Remove the parts in the order below.
1	Handlebar cover	1	
2	Band	2	
3	Front brake switch	1	Refer to "REMOVING THE FRONT BRAKE SWITCH, PARK SWITCH AND CLUTCH SWITCH".
4	Brake master cylinder/bracket	1/1	Refer to "INSTALLING THE BRAKE MASTER CYLINDER".
5	Throttle lever assembly/bracket	1/1	
6	Collar	1	
7	Park switch	1	Refer to "REMOVING THE FRONT BRAKE SWITCH, PARK SWITCH AND CLUTCH SWITCH".
8	Clutch switch	1	
9	Clutch lever/bracket	1/1	Refer to "INSTALLING THE CLUTCH LEVER".
10	Handlebar switch	1	

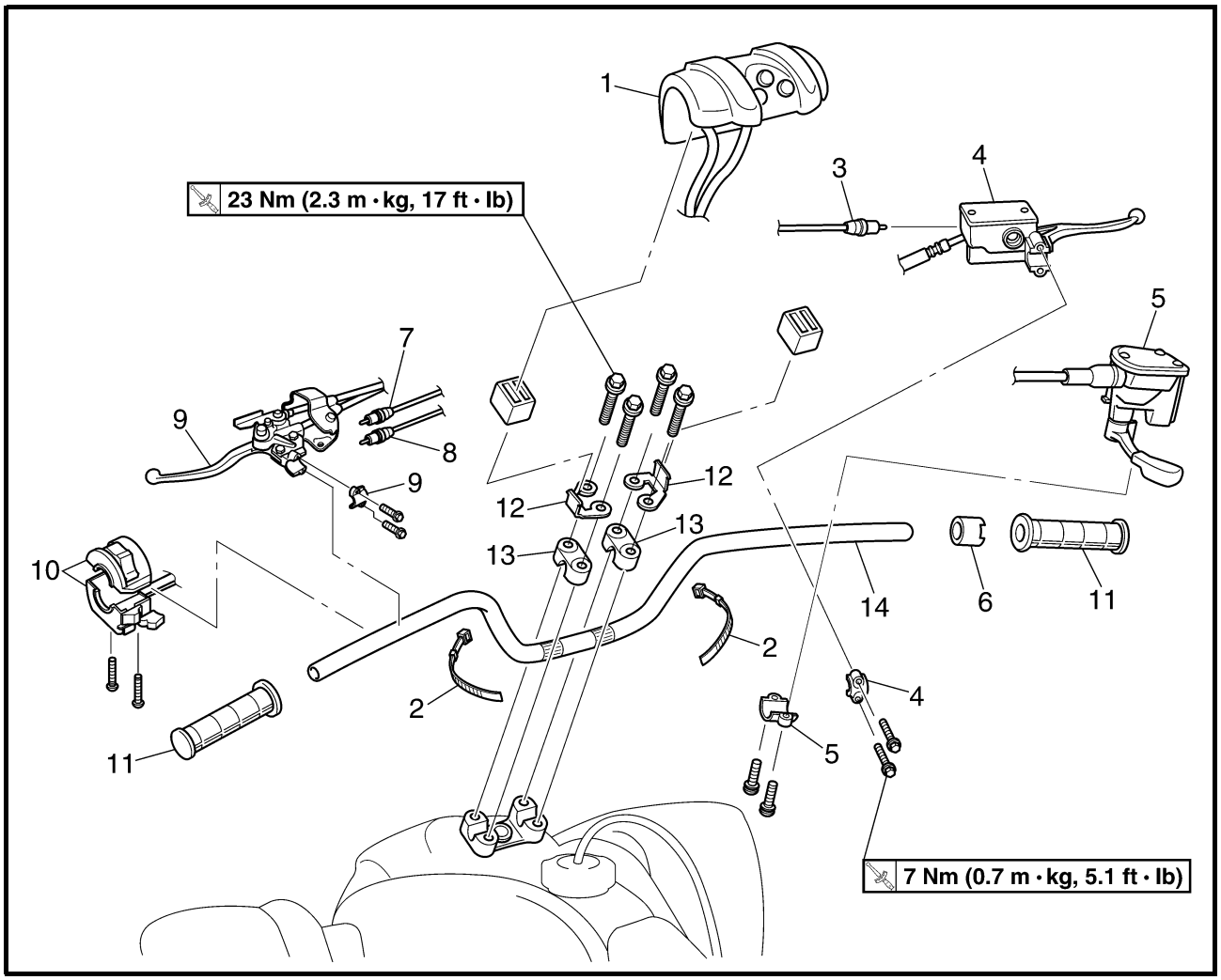

Order	Job name/Part name	Q'ty	Remarks
11	Handlebar grip	2	Refer to "REMOVING/INSTALLING THE HANDLEBAR GRIP".
12	Handlebar cover bracket	2	Refer to "INSTALLING THE HANDLEBAR".
13	Handlebar holder	2	
14	Handlebar	1	
			For installation, reverse the removal procedure.

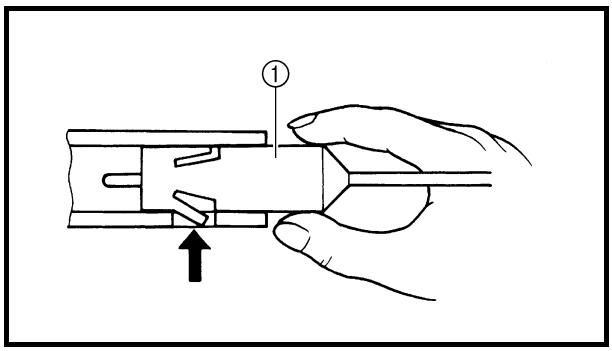

REMOVING THE FRONT BRAKE SWITCH, PARK SWITCH AND CLUTCH SWITCH

1.Remove:
- Front brake switch ①
- Park switch
- Clutch switch

NOTE:
- Push the fastener when removing the front brake switch out of the brake master cylinder.
- Push the fastener when removing the park switch and clutch switch out of the clutch lever holder.

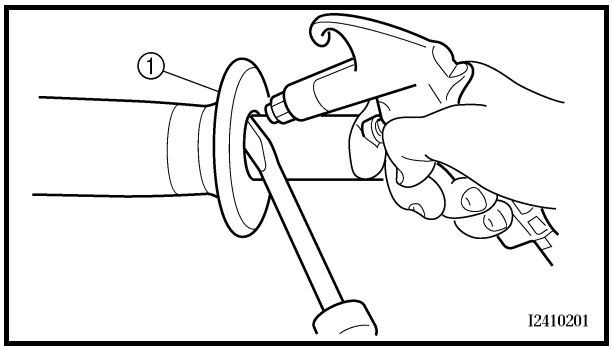

REMOVING THE HANDLEBAR GRIP

1.Remove:
- Handlebar grips ①

NOTE:
Blow compressed air between the handlebar and handlebar grip, and gradually push the grip off the handlebar.

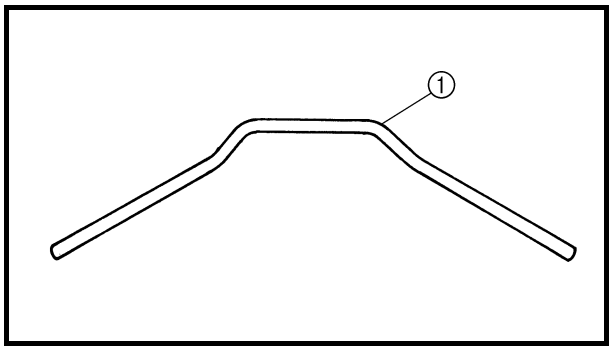

CHECKING THE HANDLEBAR

1.Check:
- Handlebar ①
  Bends/cracks/damage → Replace.

⚠ WARNING

Do not attempt to straighten a bent handlebar as this may dangerously weaken the handlebar.

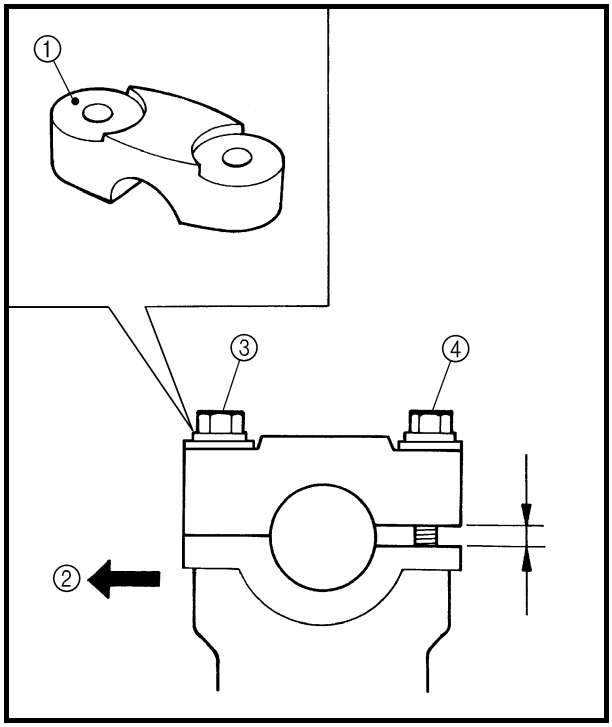

INSTALLING THE HANDLEBAR

1.Install:
- Handlebar
- Handlebar holders
- Handlebar cover brackets

	23 Nm (2.3 m • kg, 17 ft • lb)

NOTE:
The upper handlebar holder should be installed with the punched mark ① forward ②.

CAUTION:
First tighten the bolts ③ on the front side of the handlebar holder, and then tighten the bolts ④ on the rear side.

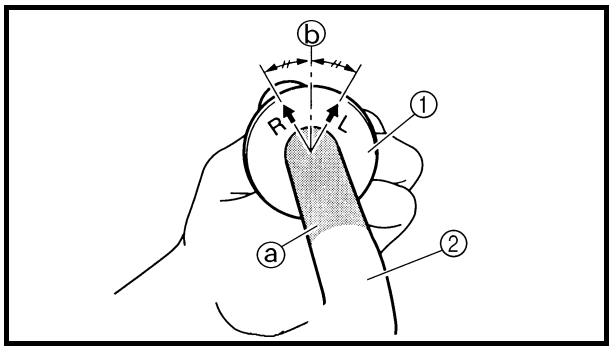

INSTALLING THE HANDLEBAR GRIP

1.Install:
- Handlebar grips ①

NOTE:
- Before applying the adhesive, wipe off grease or oil on the handlebar surface ⓐ with a lacquer thinner.
- Install the handlebar grips to the handlebar so that the line ⓑ between the two arrow marks faces straight upward.

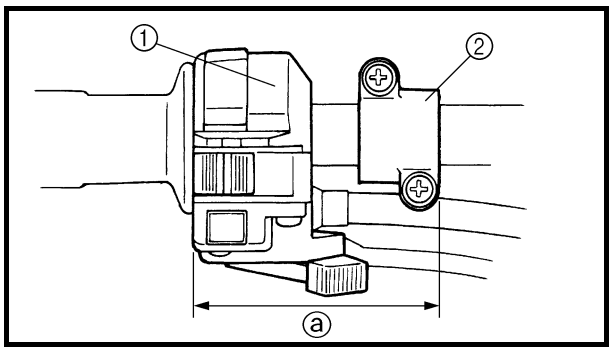

INSTALLING THE CLUTCH LEVER

1.Install:
- Handlebar switch ①
- Clutch lever
- Lever bracket ②

NOTE:
Install the lever bracket as shown.

ⓐ 80 mm (3.1 in)

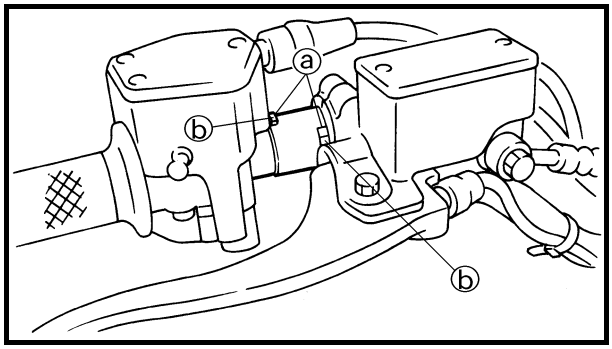

INSTALLING THE BRAKE MASTER CYLINDER

1.Install:

- Throttle lever assembly
- Collar
- Brake master cylinder

7 Nm (0.7 m • kg, 5.1 ft • lb)

NOTE:

- Engage the indentations ⓐ in the collar with the lobes ⓑ on the throttle lever assembly and brake master cylinder.
- The “UP” mark on the brake master cylinder bracket should face up.

STEERING STEM

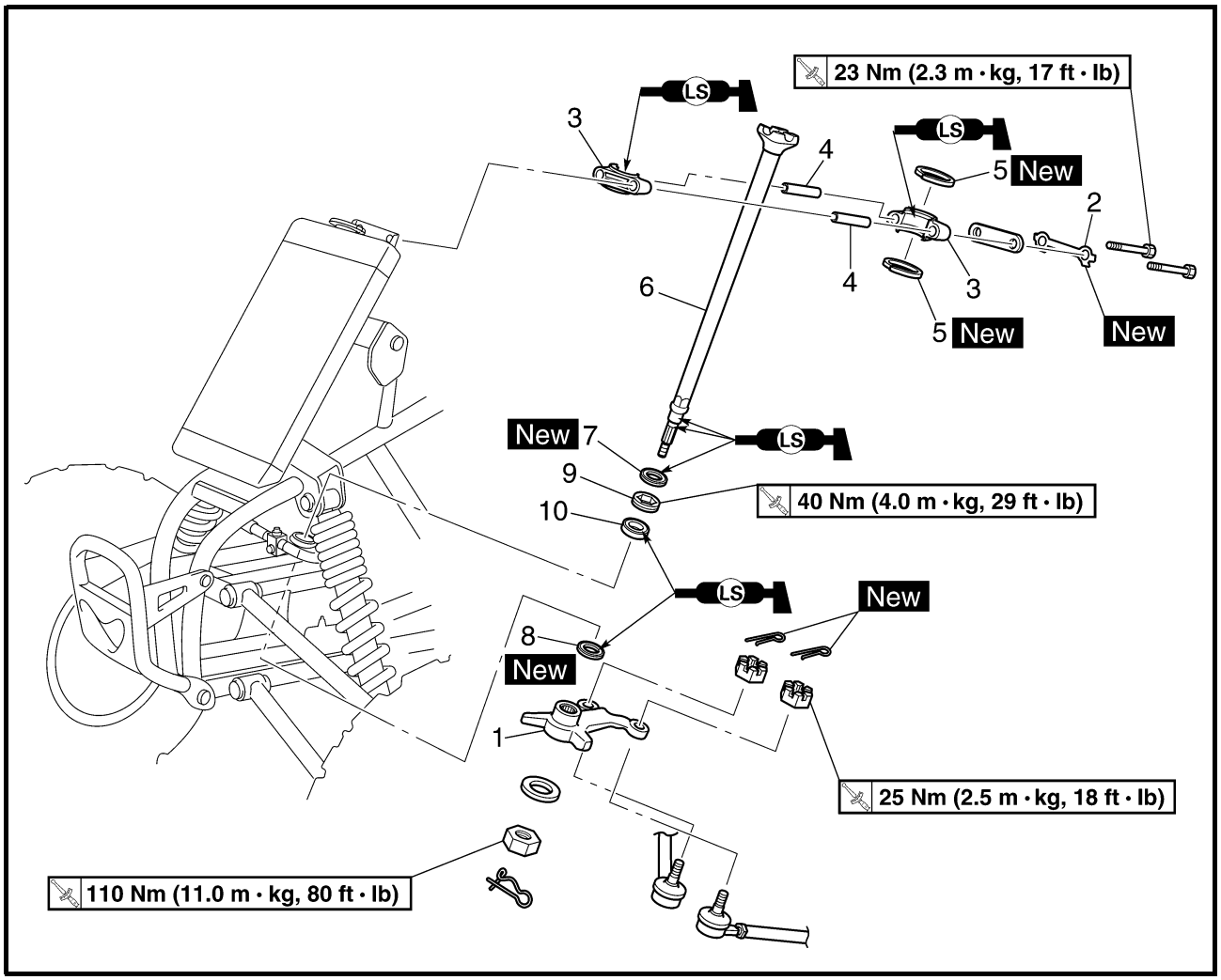

Order	Job name/Part name	Q'ty	Remarks
	Removing the steering stem		Remove the parts in the order below.
	Front fender		Refer to "SEAT, FENDERS AND FUEL TANK" in CHAPTER 3.
	Fuel tank		
	Handlebar		Refer to "HANDLEBAR".
1	Pitman arm	1	
2	Lock washer	1	Refer to "INSTALLING THE LOCK WASHER".
3	Steering stem bushing	2	
4	Collar	2	
5	Oil seal	2	
6	Steering stem	1	
7	Oil seal	1	
8	Oil seal	1	

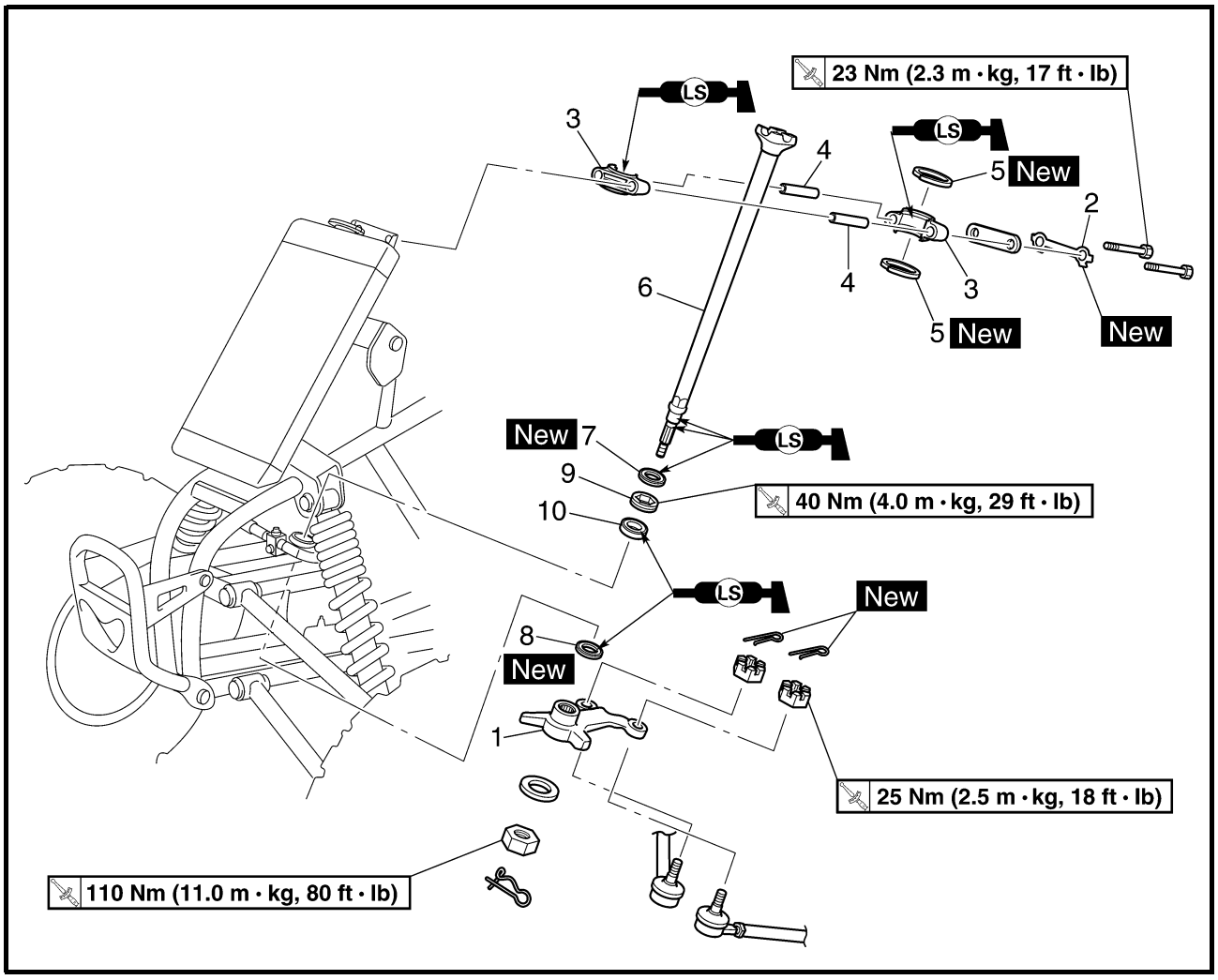

Order	Job name/Part name	Q'ty	Remarks
9	Bearing retainer	1	Refer to "REMOVING/INSTALLING THE BEARING RETAINER".
10	Bearing	1	For installation, reverse the removal procedure.

REMOVING THE BEARING RETAINER

1.Remove:
- Bearing retainer (steering stem)

	**Damper rod holder:** **P/N. YM-01327, 90890-01327**

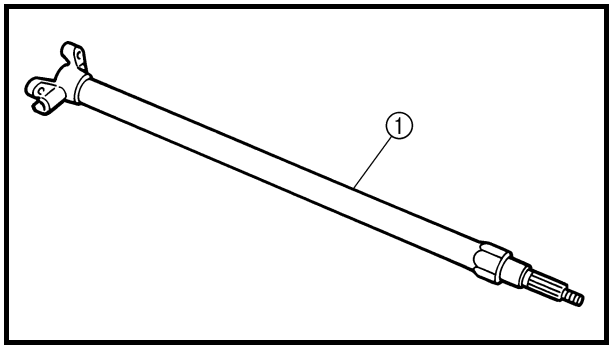

CHECKING THE STEERING STEM

1.Check:
- Steering stem ①
  Bends → Replace.

⚠ WARNING

Do not attempt to straighten a bent stem; this may dangerously weaken the stem.

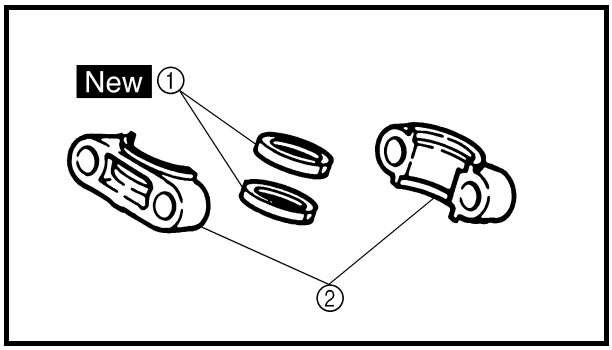

2.Check:
- Oil seals ① New
- Steering stem bushings ②
  Wear/damage → Replace.

INSTALLING THE BEARING RETAINER

1.Install:
- Bearing retainer (steering stem)

40 Nm (4.0 m • kg, 29 ft • lb)

	**Damper rod holder:** **P/N. YM-01327, 90890-01327**

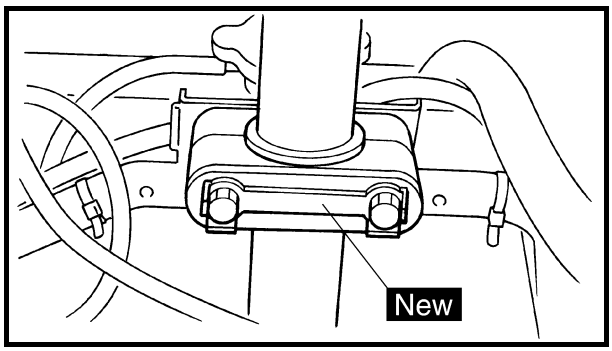

INSTALLING THE LOCK WASHER

1.Install:
- Lock washer New

23 Nm (2.3 m • kg, 17 ft • lb)

2.Bend the lock washer tab along a flat side of the bolt.

TIE-ROD AND STEERING KNUCKLE

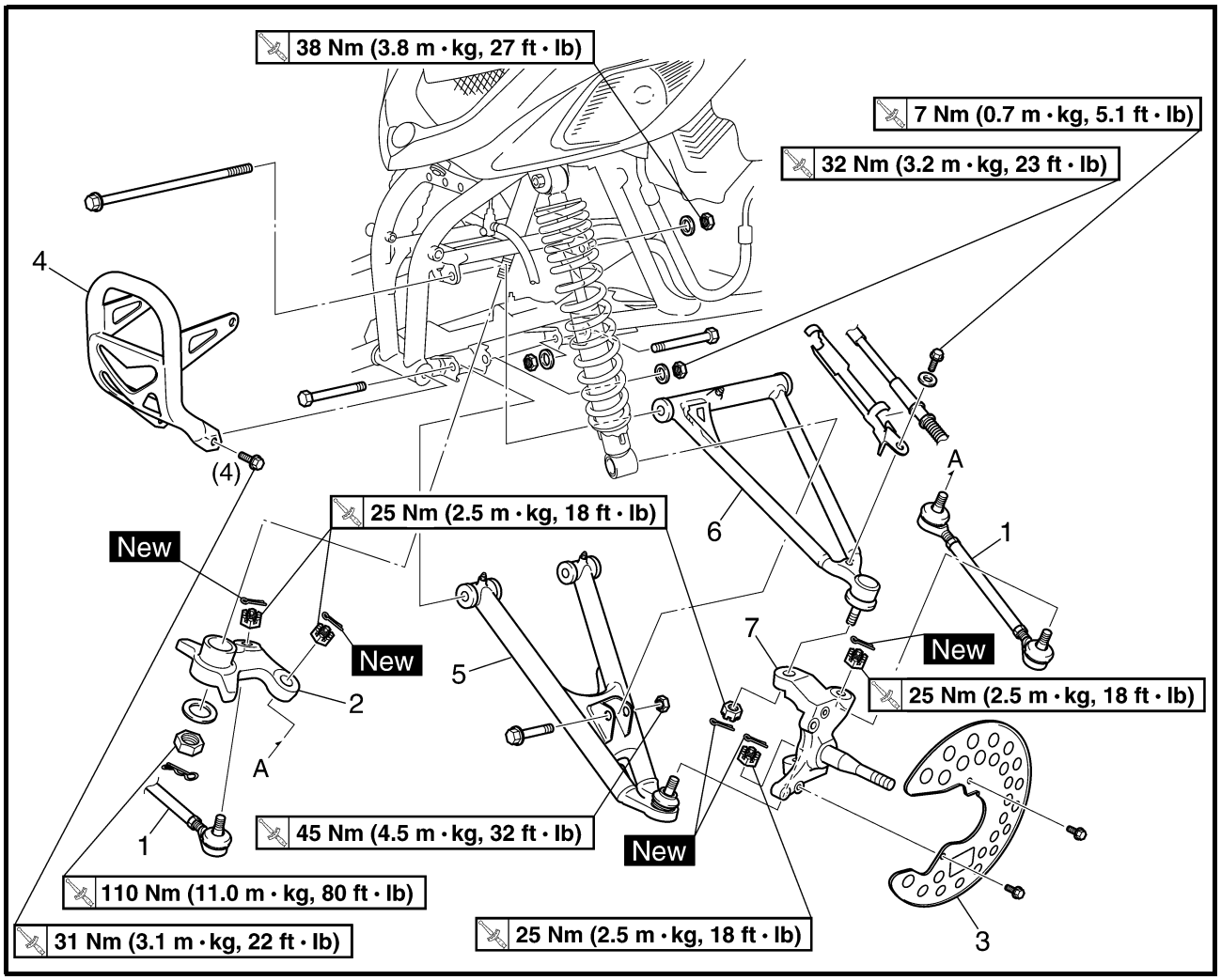

Order	Job name/Part name	Q'ty	Remarks
	Removing the tie-rod and steering knuckle		Remove the parts in the order below.
	Front wheel/brake disc		Refer to "FRONT WHEELS".
1	Tie-rod	2	Refer to "INSTALLING THE TIE-ROD".
2	Pitman arm	1	
3	Brake disc guard (inner)	1	
4	Front bumper	1	
5	Front arm (lower)	1	
6	Front arm (upper)	1	
7	Steering knuckle	1	Refer to "REMOVING THE STEERING KNUCKLE". For installation, reverse the removal procedure.

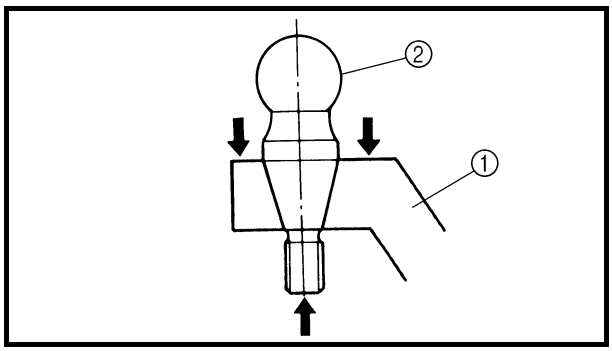

REMOVING THE STEERING KNUCKLE

1.Remove:
- Steering knuckle ①

NOTE:
Use a general puller to separate the ball joint ② and steering knuckle.

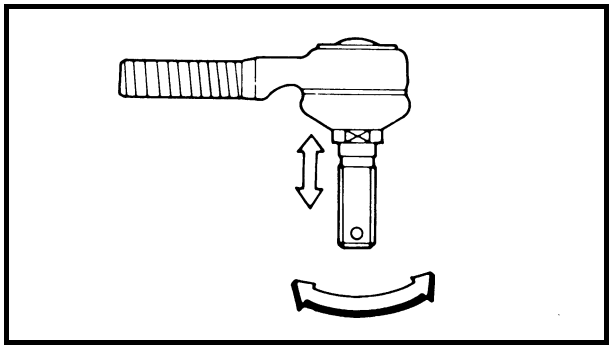

CHECKING THE TIE-ROD

1.Check:
- Tie-rod free play and movement
  Free play → Replace the tie-rod end.
  Turns roughly → Replace the tie-rod end.

2.Check:
- Tie-rod
- Bends/damage → Replace.

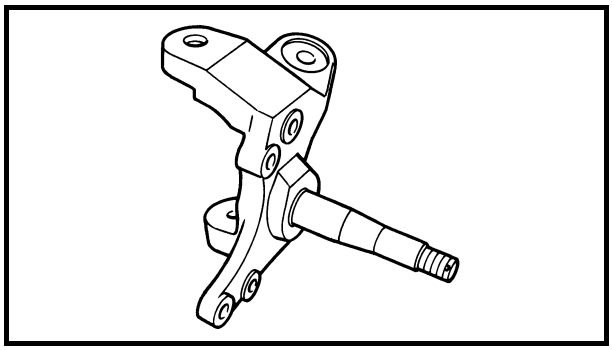

CHECKING THE STEERING KNUCKLE

1.Check:
- Steering knuckle
  Damage/pitting → Replace.

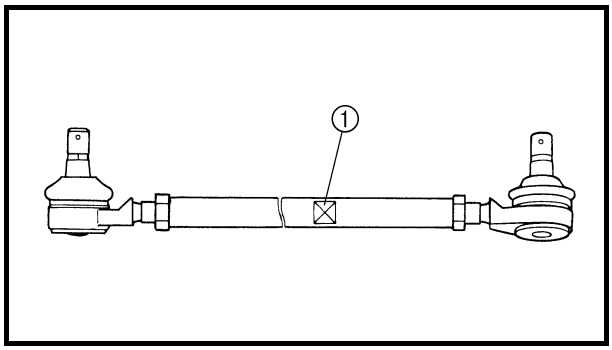

INSTALLING THE TIE-ROD

1.Install:
- Tie-rods (left and right)

	25 Nm (2.5 m • kg, 18 ft • lb)

NOTE:
The tie-rod which must be installed on the out side has grooves ①.

2.Adjust:
- Toe-in
  Refer to “ADJUSTING THE TOE-IN” in CHAPTER 3.

FRONT ARMS AND FRONT SHOCK ABSORBERS

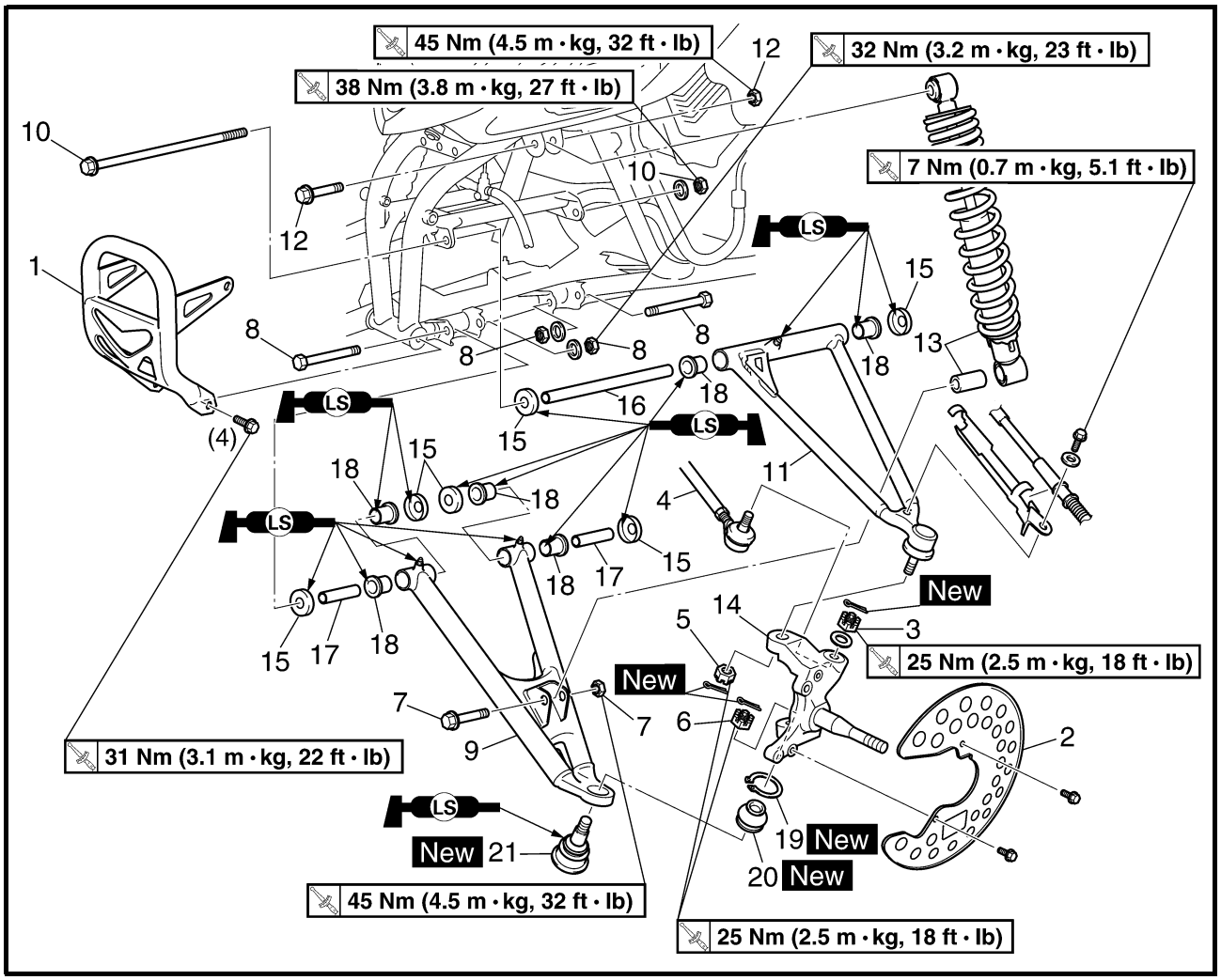

Order	Job name/Part name	Q'ty	Remarks
	Removing the front arm and front shock absorber		Remove the parts in the order below.
	Front wheel/brake disc		Refer to "FRONT WHEELS".
1	Front bumper	1	
2	Brake disc guard (inner)	1	
3	Nut	1	
4	Tie-rod	1	Disconnect.
5	Nut	1	
6	Nut	1	
7	Nut/bolt	1/1	
8	Nut/bolt	2/2	
9	Front arm (lower)	1	Refer to "REMOVING/INSTALLING THE FRONT ARMS".
10	Nut/bolt	1/1	
11	Front arm (upper)	1	

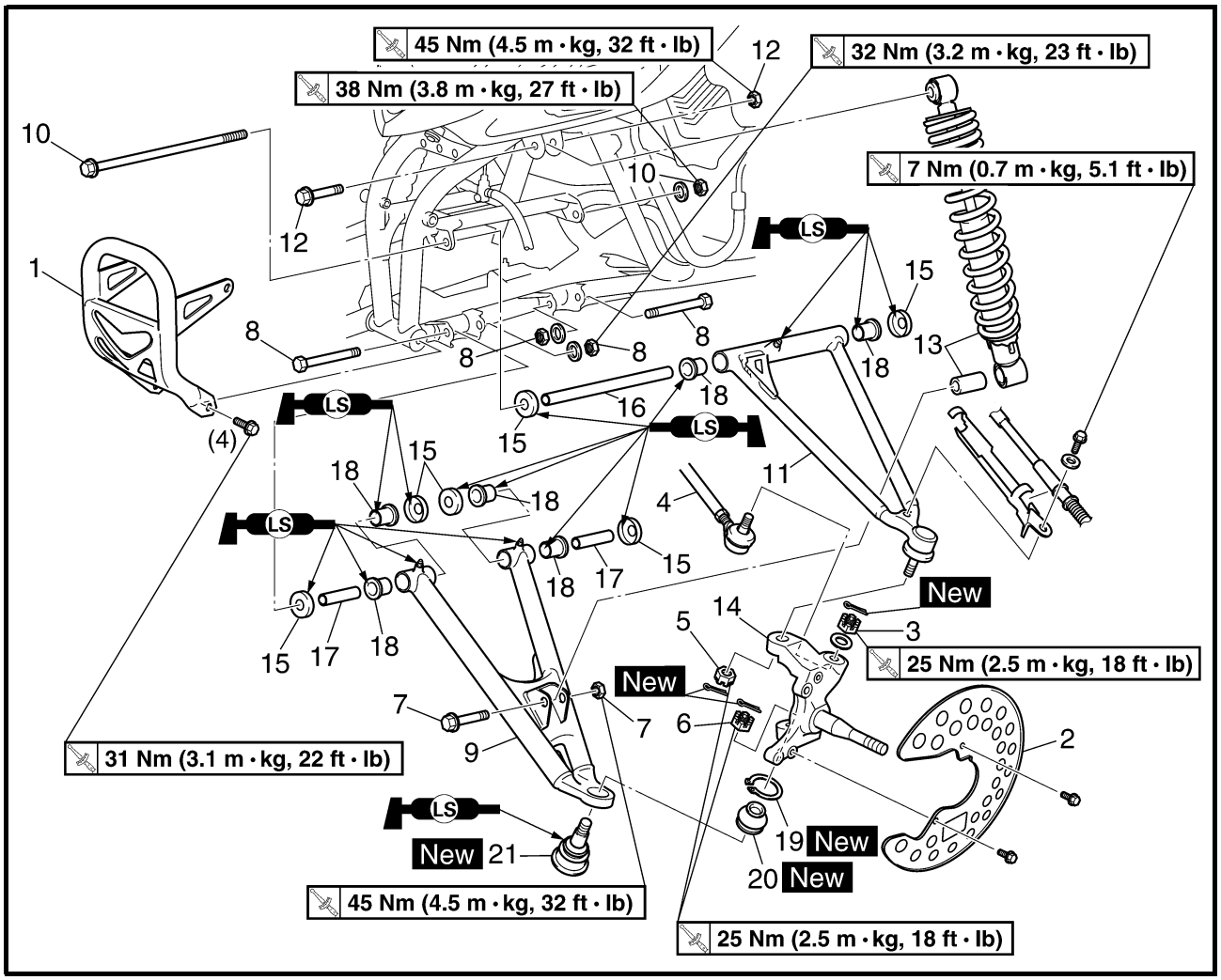

Order	Job name/Part name	Q'ty	Remarks
12	Nut/bolt	1/1	
13	Front shock absorber/collar	1/1	
14	Steering knuckle	1	
15	Dust cover	6	
16	Collar	1	
17	Collar	2	
18	Bushing	6	
19	Circlip	1	
20	Rubber boot	1	
21	Ball joint	1	
			For installation, reverse the removal procedure.

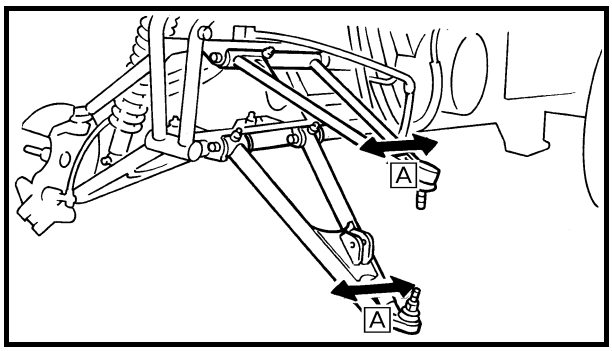

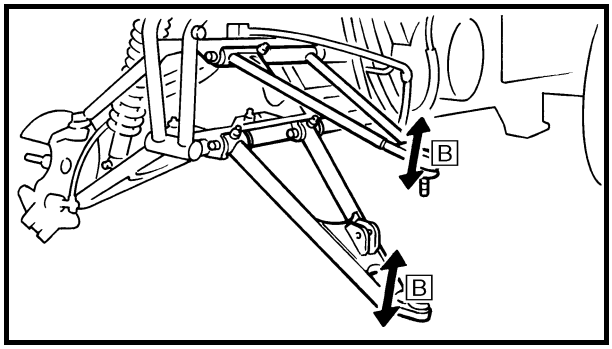

REMOVING THE FRONT ARM

1.Check:
- Front arm free play

****

Checking steps:
- Check the front arm side play [A] by moving it from side to side.
  If side play is noticeable, check the bushings.
- Check the front arm vertical movement [B] by moving it up and down.
  If the vertical movement is tight or rough, or if there is binding, check the bushings.

****

2.Remove:
- Front arms

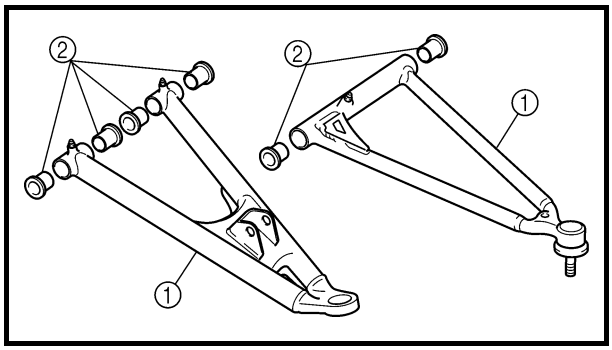

CHECKING THE FRONT ARM

1.Check:
- Front arms ①
  Bends/damage → Replace.

2.Check:
- Bushings ②
  Wear/damage → Replace.

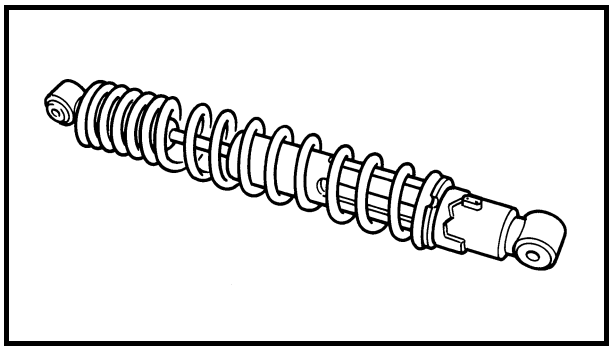

CHECKING THE FRONT SHOCK ABSORBER

1.Check:
- Shock absorber rod
  Bends/damage → Replace the shock absorber assembly.
- Shock absorber assembly
  Oil leaks → Replace the shock absorber assembly.
- Spring
  Fatigue → Replace the shock absorber assembly.
  Move the spring up and down.

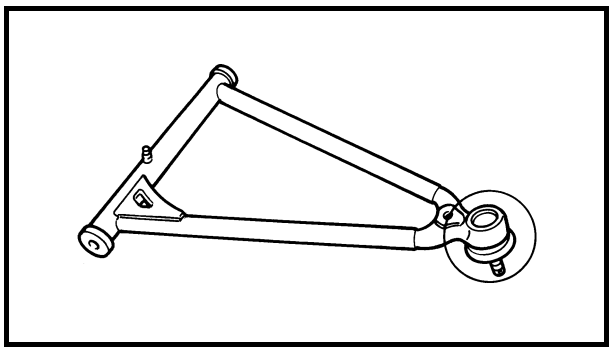

CHECKING THE BALL JOINT

1.Check:

- Ball joint (front arm-upper)
  Damage/pitting → Replace the front arm (upper).
  Free play → Replace the front arm.
  Turns roughly → Replace the front arm (upper).

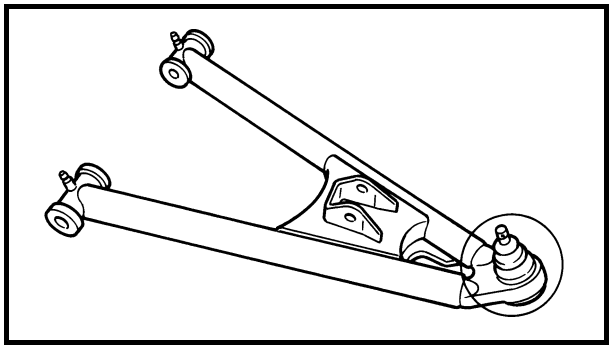

2.Check:

- Ball joint (front arm-lower)
  Damage/pitting → Replace the ball joint.
  Free play → Replace the ball joint.
  Turns roughly → Replace the ball joint.

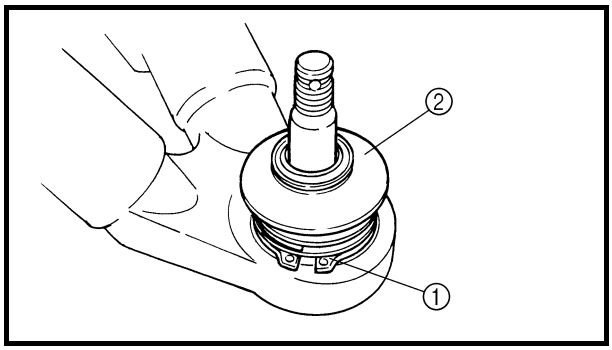

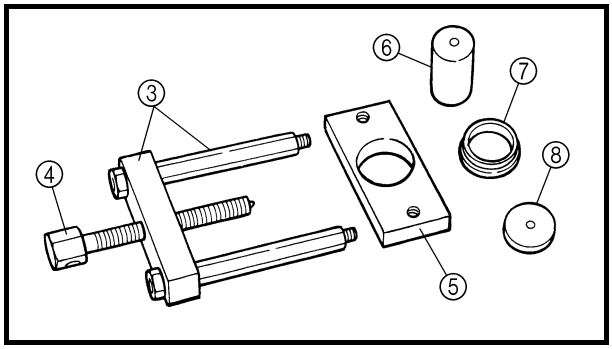

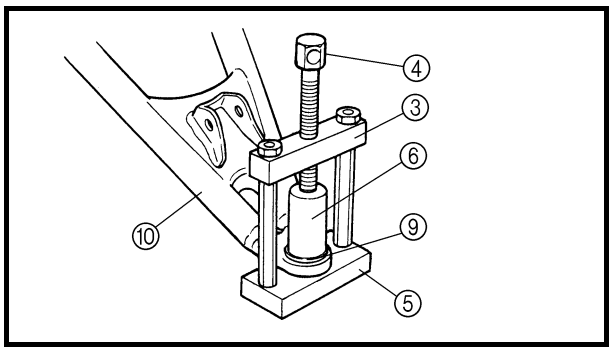

****

Ball joint replacement steps:

- Clean the outside of the front lower arm.
- Remove the circlip ① and rubber boot ②.
  Use the ball joint remover and installer set.

Ball joint remover/installer set:
P/N. YM-01474, 90890-01474
Ball joint remover/installer attachment set:
P/N. YM-01480, 90890-01480

③ Body	YM-01474 90890-01474
④ Long bolt	
⑤ Base	YM-01480 90890-01480
⑥ Remover attachment	
⑦ Installer spacer	
⑧ Installer washer	

- Install the body ③, long bolt ④, base ⑤ and attachment ⑥ onto ball joint.
- Hold the body ③ in place while turning in the long bolt ④ to remove the ball joint ⑨ from the front lower arm ⑩.
- Remove the ball joint remover/installer.

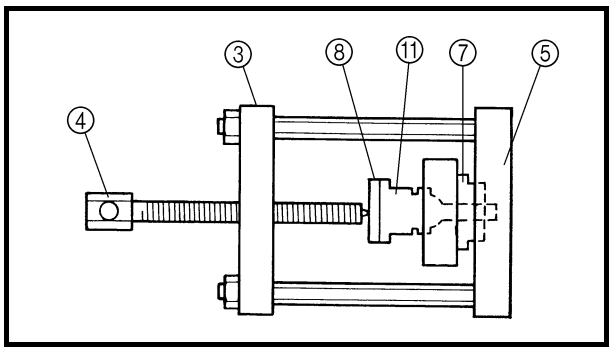

- Attach the assembled ball joint remover/installer, new ball joint ⑪, installer spacer ⑦ and installer washer ⑧ to the front lower arm ⑩.

NOTE:
- Do not tap or damage the top of the ball joint.
- Installer spacer ⑦ must be aligned with the projection on the head of the ball joint ⑪.

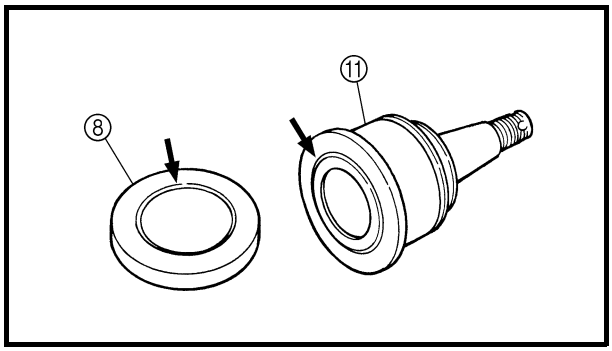

- Remove the ball joint remover/installer.
- Apply lithium-soap base grease to the new ball joint ⑪.
- Install a new rubber boot and new circlip.

NOTE:
Always use a new ball joint set.

****

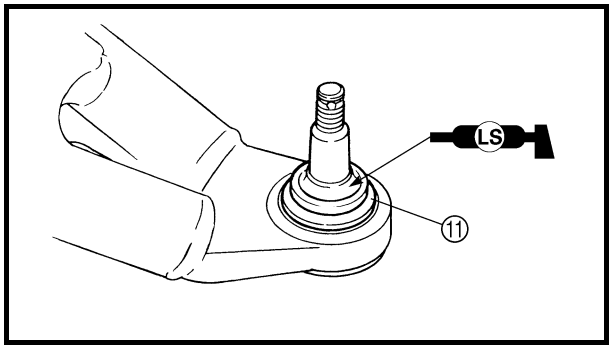

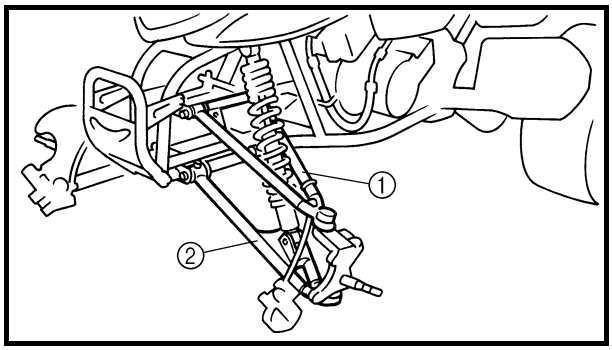

INSTALLING THE FRONT ARM

1.Install:
- Front upper arm ①

	38 Nm (3.8 m • kg, 27 ft • lb)

- Front lower arm ②

	32 Nm (3.2 m • kg, 23 ft • lb)

NOTE:
Be sure to position the bolts (upper and lower) so that the bolt head faces outward.

REAR SHOCK ABSORBER AND RELAY ARM

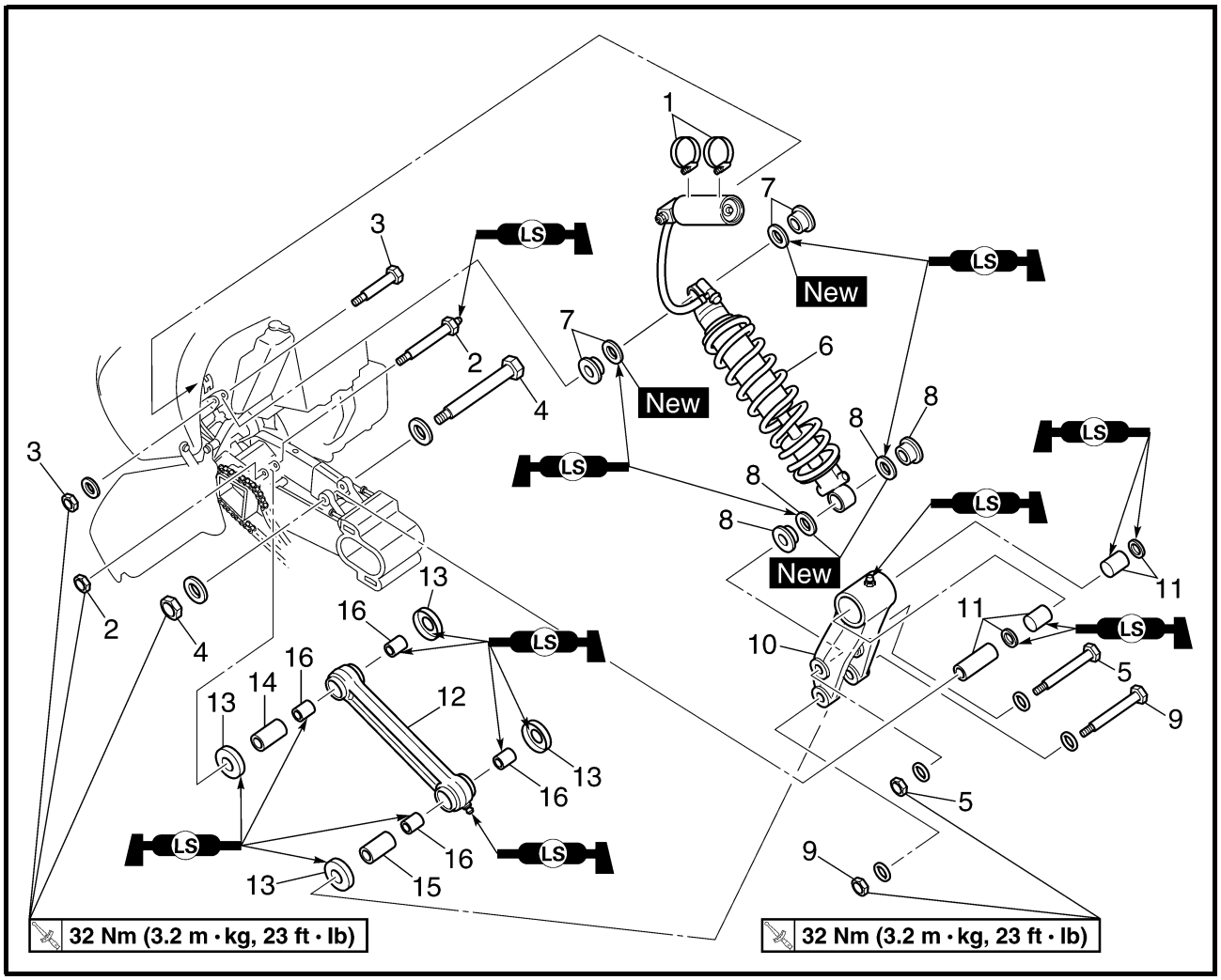

Order	Job name/Part name	Q'ty	Remarks
	Removing the rear shock absorber and relay arm		Remove the parts in the order below.
	Rear wheels and hub		Refer to "REAR WHEELS, WHEEL AXLE AND HUB".
1	Metal screw clamp	2	
2	Self-locking nut/bolt	1/1	Refer to "REMOVING THE REAR SHOCK ABSORBER".
3	Self-locking nut/bolt	1/1	
4	Self-locking nut/bolt	1/1	
5	Self-locking nut/bolt	1/1	
6	Rear shock absorber	1	
7	Collar/oil seal	2/2	
8	Collar/oil seal	2/2	

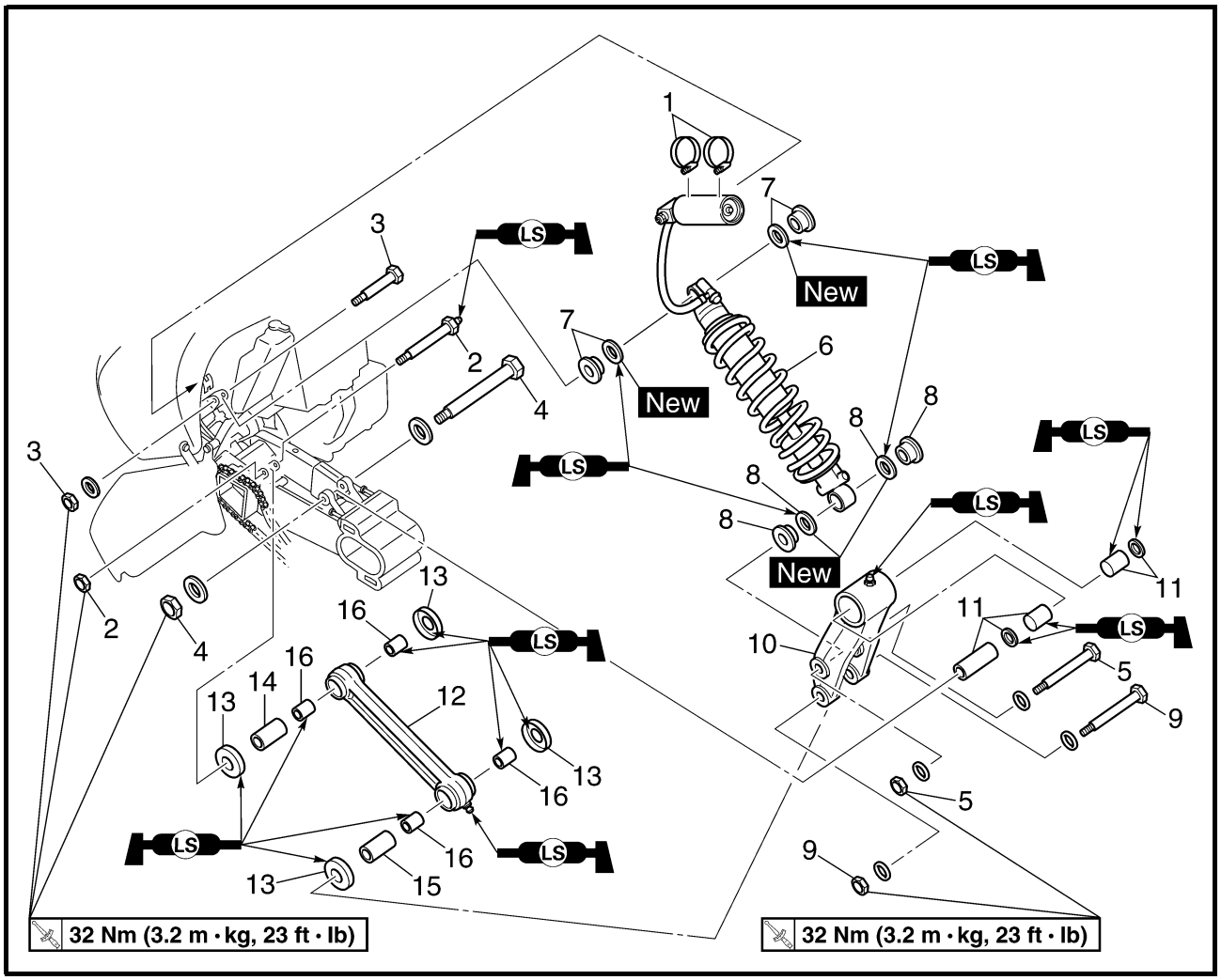

Order	Job name/Part name	Q'ty	Remarks
9	Self-locking nut/bolt	1/1	
10	Relay arm	1	
11	Spacer/oil seal/bushing	1/2/2	Refer to "INSTALLING THE RELAY ARM AND CONNECTING ARM".
12	Connecting arm	1	
13	Dust cover	4	
14	Spacer	1	
15	Spacer	1	
16	Bushing	4	Refer to "INSTALLING THE RELAY ARM AND CONNECTING ARM". For installation, reverse the removal procedure.

HANDLING THE REAR SHOCK ABSORBER AND GAS CYLINDER

⚠ WARNING

This rear shock absorber and gas cylinder contain highly compressed nitrogen gas. Before handling the rear shock absorber or gas cylinder, read and make sure you understand the following information. The manufacturer cannot be held responsible for property damage or personal injury that may result from improper handling of the rear shock absorber and gas cylinder.

- **Do not tamper or attempt to open the rear shock absorber or gas cylinder.**
- **Do not subject the rear shock absorber or gas cylinder to an open flame or any other source of high heat. High heat can cause an explosion due to excessive gas pressure.**
- **Do not deform or damage the rear shock absorber or gas cylinder in any way. If the rear shock absorber, gas cylinder or both are damaged, damping performance will suffer.**

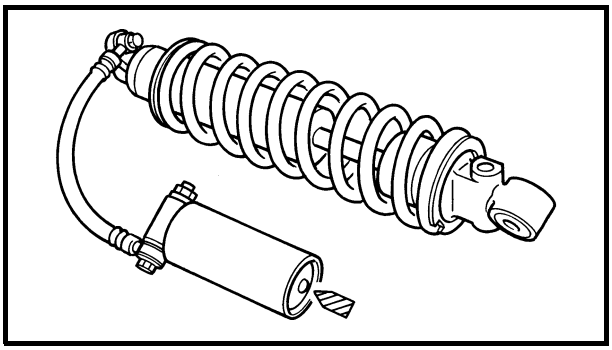

DISPOSING OF A REAR SHOCK ABSORBER AND GAS CYLINDER

Gas pressure must be released before disposing of a rear shock absorber and gas cylinder. To release the gas pressure, press on the gas valve needle with a suitable tool as shown, until all of the gas is released (the hissing has stopped).

⚠ WARNING

Wear eye protection to prevent eye damage from released gas or metal chips.

REMOVING THE REAR SHOCK ABSORBER

1.Remove:
- Connecting arm-to-frame bolt
- Rear shock absorber upper bolt

NOTE:
While removing the connecting arm-to-frame bolt, hold the swingarm so that it does not drop down.

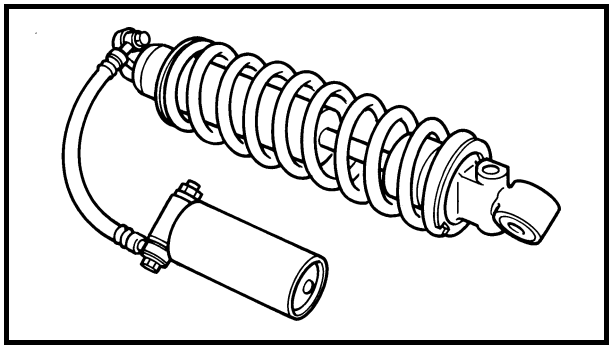

CHECKING THE REAR SHOCK ABSORBER

1.Check:
- Shock absorber
  Oil leaks → Replace the rear shock absorber assembly.
- Shock absorber rod
  Bends/damage → Replace the rear shock absorber assembly.
- Spring
  Fatigue → Replace the rear shock absorber assembly.
  Move the spring up and down.
- Gas cylinder
  Damage/gas leaks → Replace the rear shock absorber assembly.

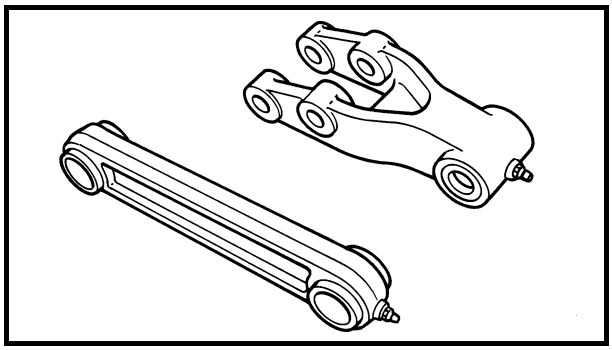

CHECKING THE RELAY ARM AND CONNECTING ARM

1.Check:
- Relay arm
- Connecting arm
  Damage/wear → Replace.
- Bushings
- Spacers
- Oil seals
  Damage/pitting/scratches → Replace.

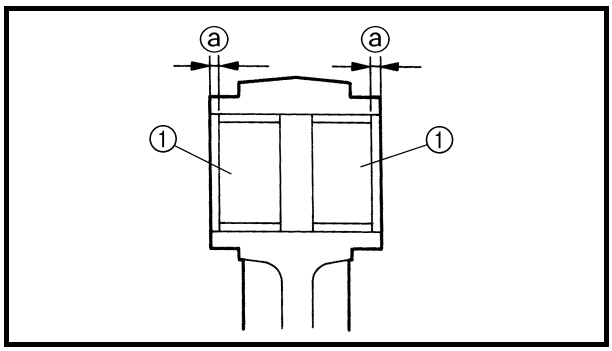

INSTALLING THE RELAY ARM AND CONNECTING ARM

1.Install:
- Bushing ①
  (to connecting arm)

NOTE:
Apply the lithium soap base grease on the bushing when installing.

Installed depth of bushing ⓐ:
1 mm (0.04 in)

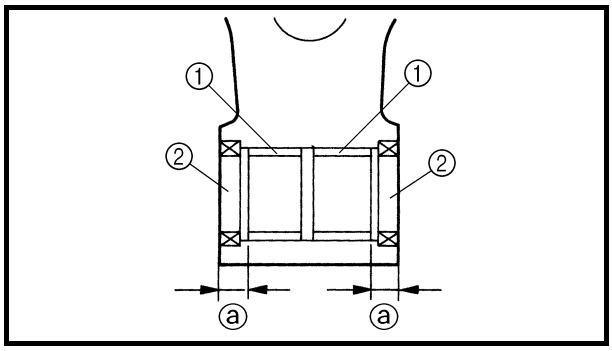

2.Install:
- Bushing ①
- Oil seal ② New
  (to relay arm)

NOTE:
Apply the lithium soap base grease on the bushing when installing.

Installed depth of bushing ⓐ:
6.5 mm (0.26 in)

INSTALLING THE REAR SHOCK ABSORBER

1.Install:
- Connecting arm
- Relay arm
- Rear shock absorber

NOTE:
When installing the rear shock absorber, lift up the swingarm.

SWINGARM AND DRIVE CHAIN

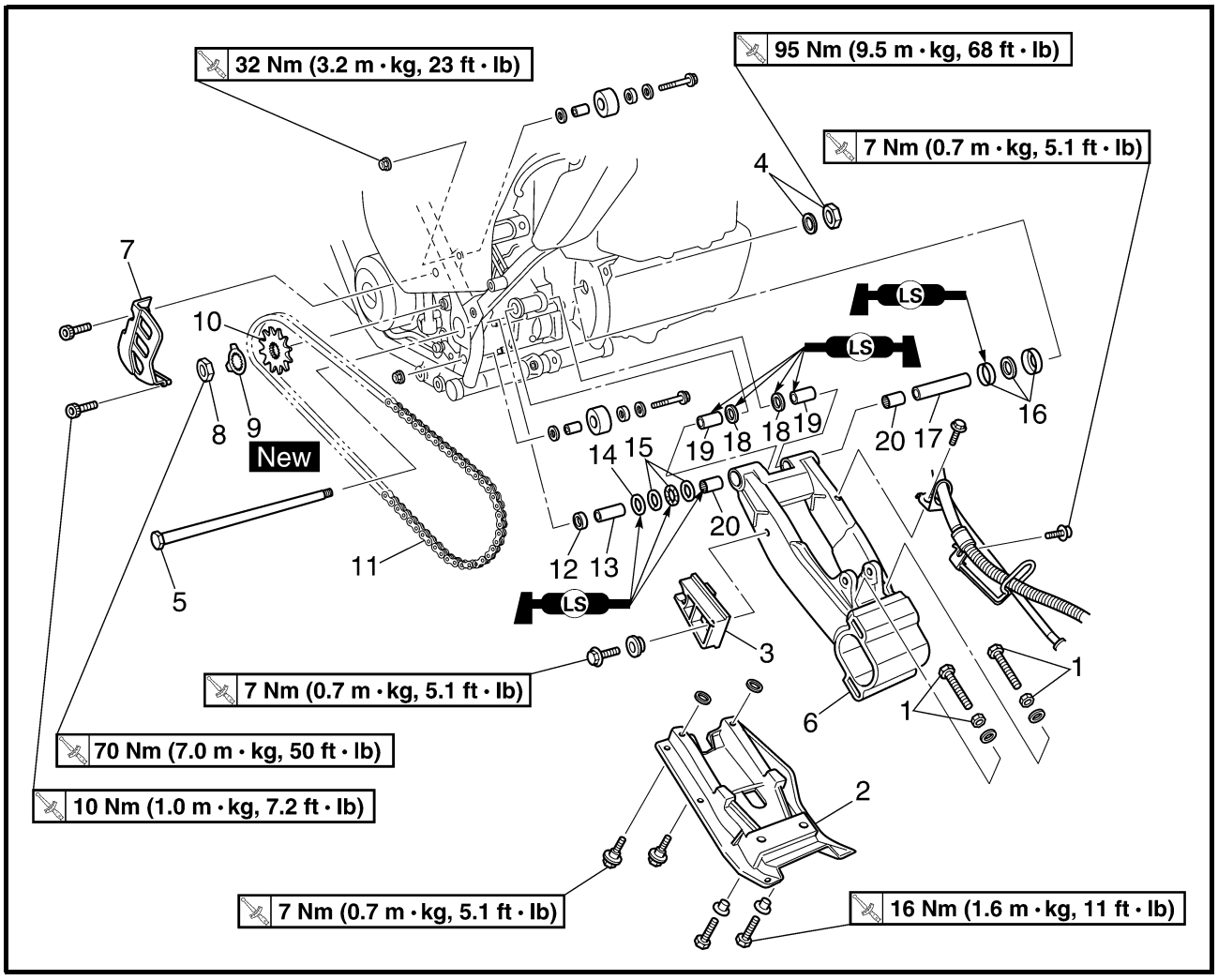

Order	Job name/Part name	Q'ty	Remarks
	Removing the swingarm and drive chain		Remove the parts in the order below.
	Rear wheels and hub		Refer to "REAR WHEELS, WHEEL AXLE AND HUB".
	Rear shock absorber		Refer to "REAR SHOCK ABSORBER AND RELAY ARM".
	Left footrest and left footrest guard bracket		Refer to "ENGINE REMOVAL" in CHAPTER 5.
1	Adjusting bolt/nut	2/2	
2	Swingarm skid plate	1	
3	Drive chain guide	1	
4	Pivot shaft nut/washer	1/1	
5	Pivot shaft	1	
6	Swingarm	1	Refer to "REMOVING THE SWINGARM".
7	Drive sprocket cover	1	

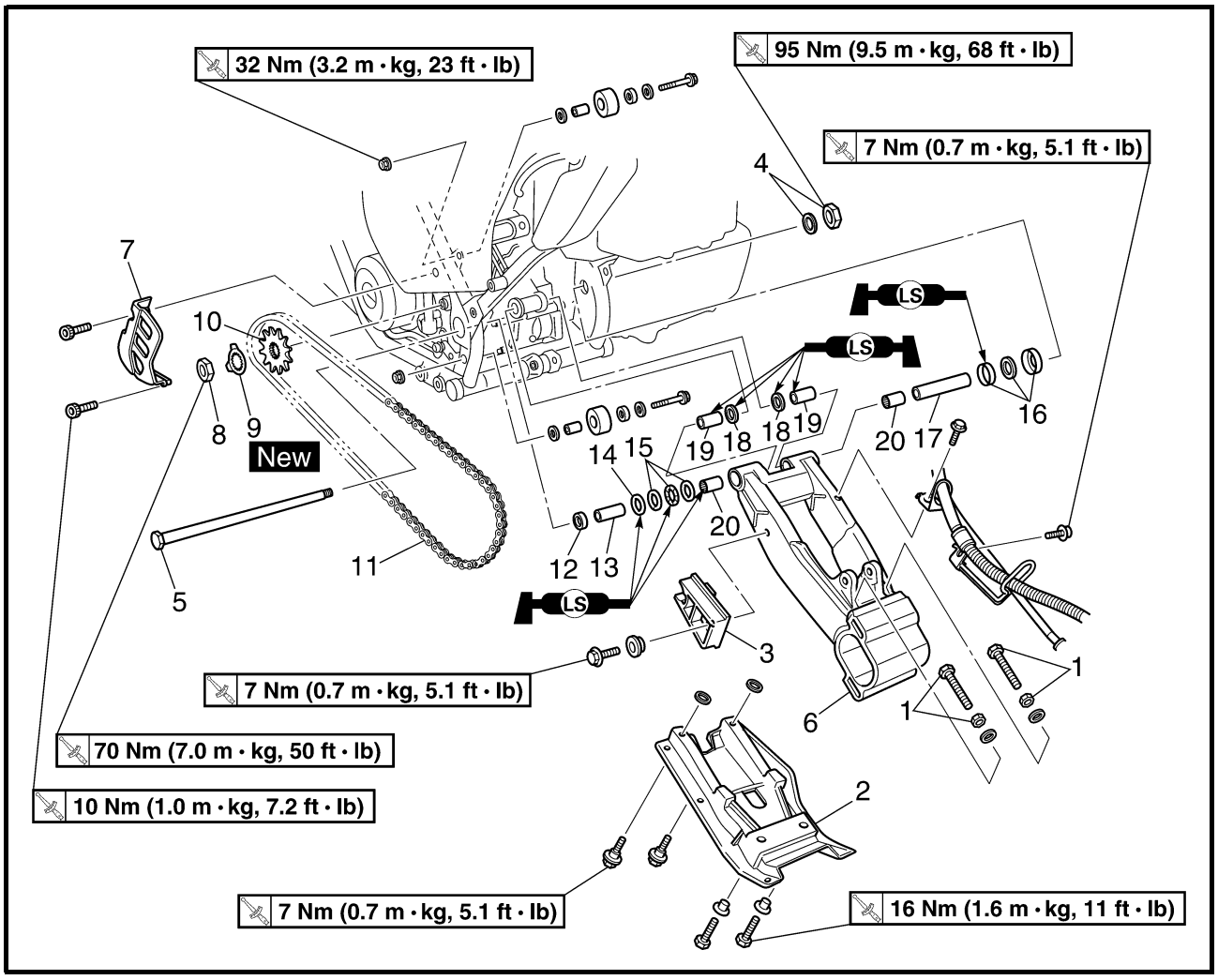

Order	Job name/Part name	Q'ty	Remarks
8	Nut	1	Refer to "INSTALLING THE DRIVE SPROCKET".
9	Lock washer	1	
10	Drive sprocket	1	
11	Drive chain	1	
12	Collar	1	
13	Spacer	1	
14	Oil seal	1	
15	Bearing	1	
16	Dust cover/oil seal/washer	1/1/1	
17	Spacer	1	
18	Oil seal	2	
19	Bushing	2	Refer to "INSTALLING THE SWINGARM".
20	Bearing	2	
			For installation, reverse the removal procedure.

NOTE:
Before removing the drive chain and the sprockets, measure the drive chain slack and a ten link section of the drive chain.

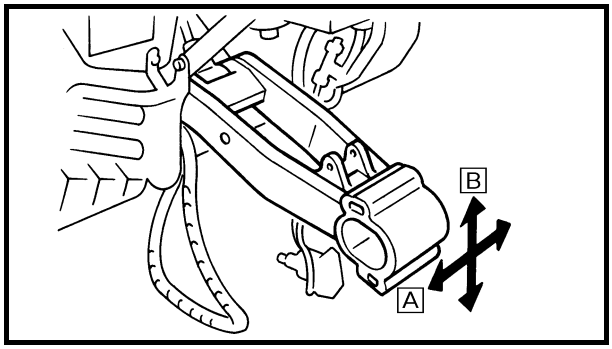

REMOVING THE SWINGARM

1.Check:
- Swingarm free play

****

Checking steps:
- Check the tightening torque of the pivot shaft nut.

	Pivot shaft nut: **95 Nm (9.5 m • kg, 68 ft • lb)**

- Check the swingarm side play [A] by moving it from side to side.
  If side play is noticeable, check the collar, spacers, bearings, bushings and frame pivot.
- Check the swingarm vertical movement [B] by moving it up and down.
  If vertical movement is tight or rough, or if there is binding, check the collar, spacers, bearings, bushings and frame pivot.

****

2.Remove:
- Pivot shaft nut
- Pivot shaft
- Swingarm

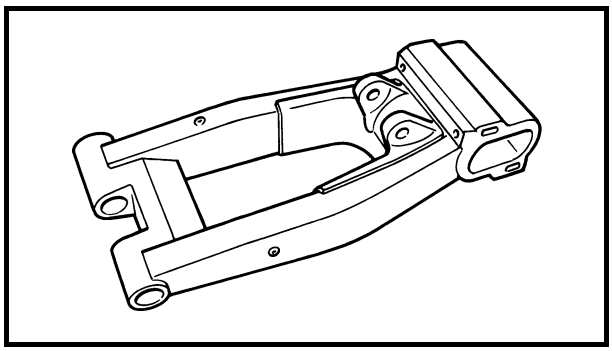

CHECKING THE SWINGARM

1.Check:
- Swingarm
  Bends/cracks/damage → Replace.

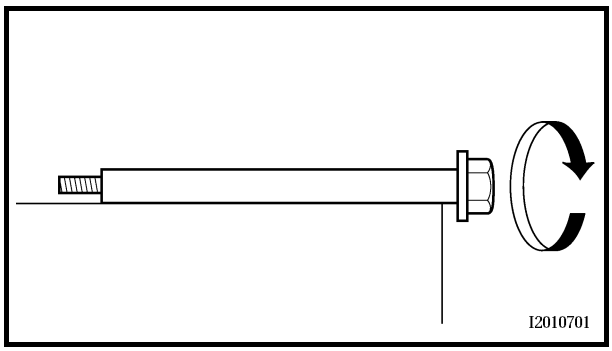

2.Check:
- Pivot shaft
  Roll the axle on a flat surface.
  Bends → Replace.

WARNING

Do not attempt to straighten a bent pivot shaft.

3.Clean:
- Pivot shaft
- Collar
- Spacers
- Bearings
- Bushings

Recommended cleaning solvent:
Kerosine

4.Check:
- Spacers
- Oil seals
  Damage/wear → Replace.
- Bearings
- Bushings
  Damage/pitting → Replace.

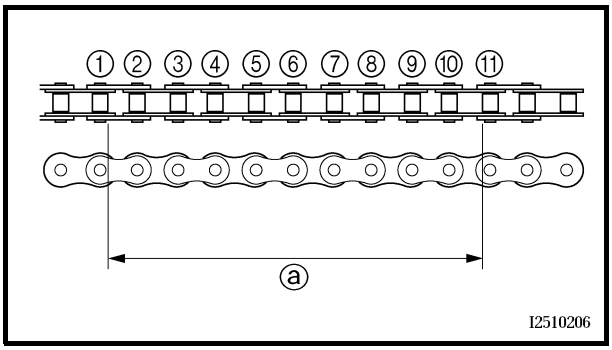

CHECKING THE DRIVE CHAIN

1.Measure:
- Ten-link section ⓐ of the drive chain
  Out of specification → Replace the drive chain.

Max. ten-link drive chain section:
150.1 mm (5.91 in)

NOTE:
- While measuring the ten-link section, push down on the drive chain to increase its tension.
- Measure the length between drive chain roller ① and ⑪ as shown.
- Perform this measurement at two or three different places.

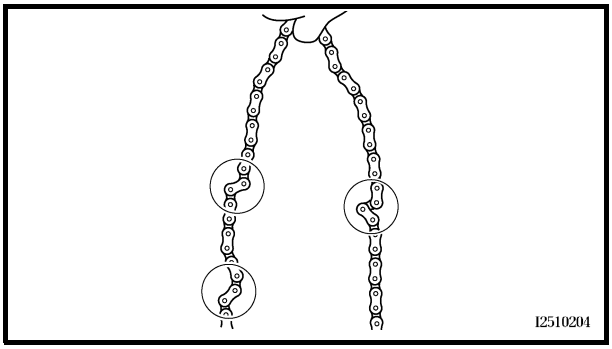

2.Check:
- Drive chain
  Stiffness → Clean and lubricate or replace.

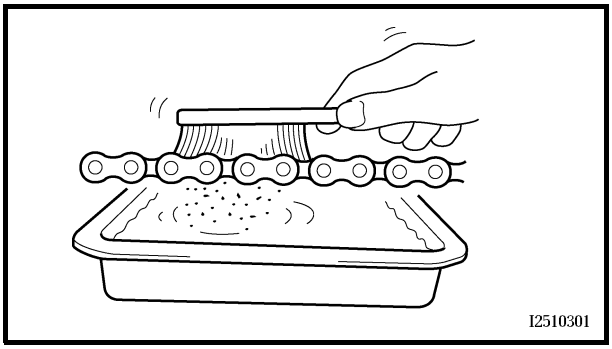

3.Clean:
- Drive chain

****
- Wipe the drive chain with a clean cloth.
- Put the drive chain in kerosine and remove any remaining dirt.

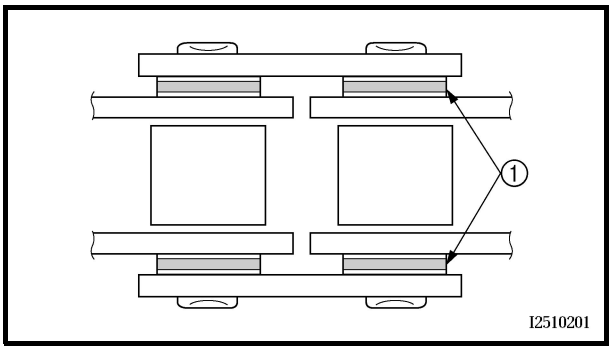

- Remove the drive chain from the kerosine and completely dry it.

CAUTION:

This machine has a drive chain with small rubber O-rings ① between the drive chain side plates. Never use high-pressure water or air, steam, gasoline, certain solvents (e.g., benzine), or a coarse brush to clean the drive chain. High-pressure methods could force dirt or water into the drive chain's internals, and solvents will deteriorate the O-rings. A coarse brush can also damage the O-rings. Therefore, use only kerosine to clean the drive chain.

****

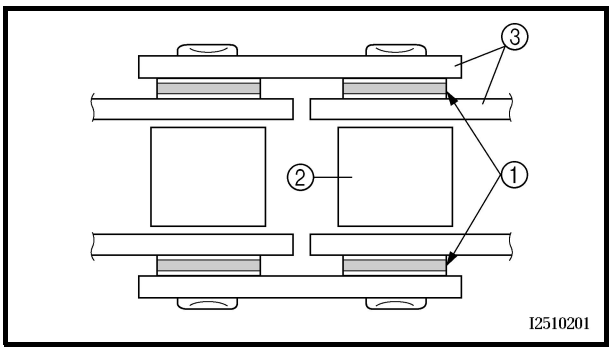

4.Check:
- O-rings ①
  Damage → Replace the drive chain.
- Drive chain rollers ②
  Damage/wear → Replace the drive chain.
- Drive chain side plates ③
  Cracks/damage/wear → Replace the drive chain.

5.Lubricate:
- Drive chain

Recommended lubricant:
Engine oil or chain lubricant suitable for O-ring chains

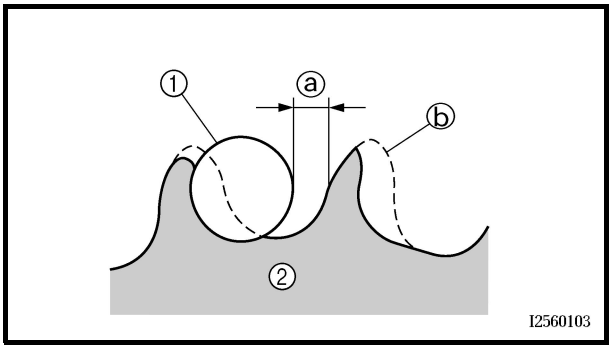

6.Check:
- Drive sprocket
- Driven sprocket

More than 1/4 tooth ⓐ wear → Replace the drive chain sprockets as a set.
Bent teeth → Replace the drive chain sprockets as a set.

ⓑ Correct
① Drive chain roller
② Drive chain sprocket

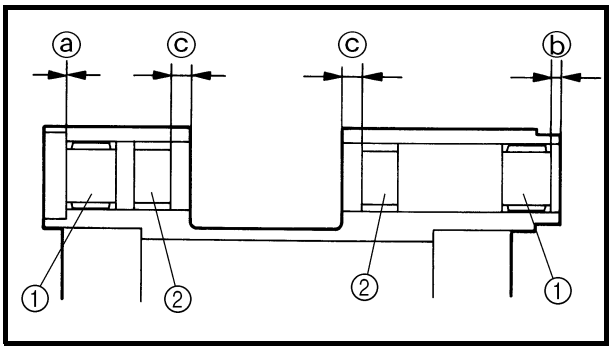

INSTALLING THE SWINGARM

1.Install:
- Bearings ①
- Bushings ②

(to swingarm)

NOTE:
Apply the lithium soap base grease on the bearing and bushing when installing.

Installed depth of bearing:
Left ⓐ: 0 mm (0 in)
Right ⓑ: 4 mm (0.16 in)
Installed depth of bushing ⓒ:
8 mm (0.31 in)

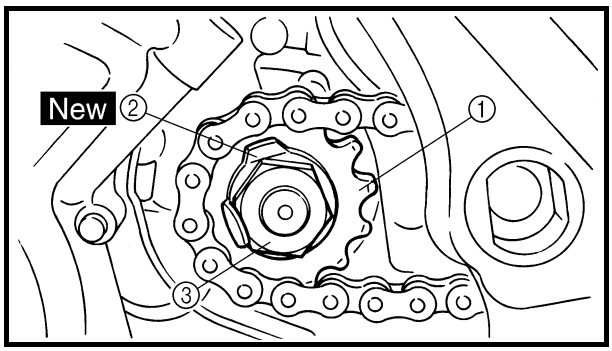

INSTALLING THE DRIVE SPROCKET

1.Install:
- Drive sprocket ①
- Lock washer ② New
- Nut ③ **70 Nm (7.0 m • kg, 50 ft • lb)**

2.Bend the lock washer tab along a flat side of the nut.

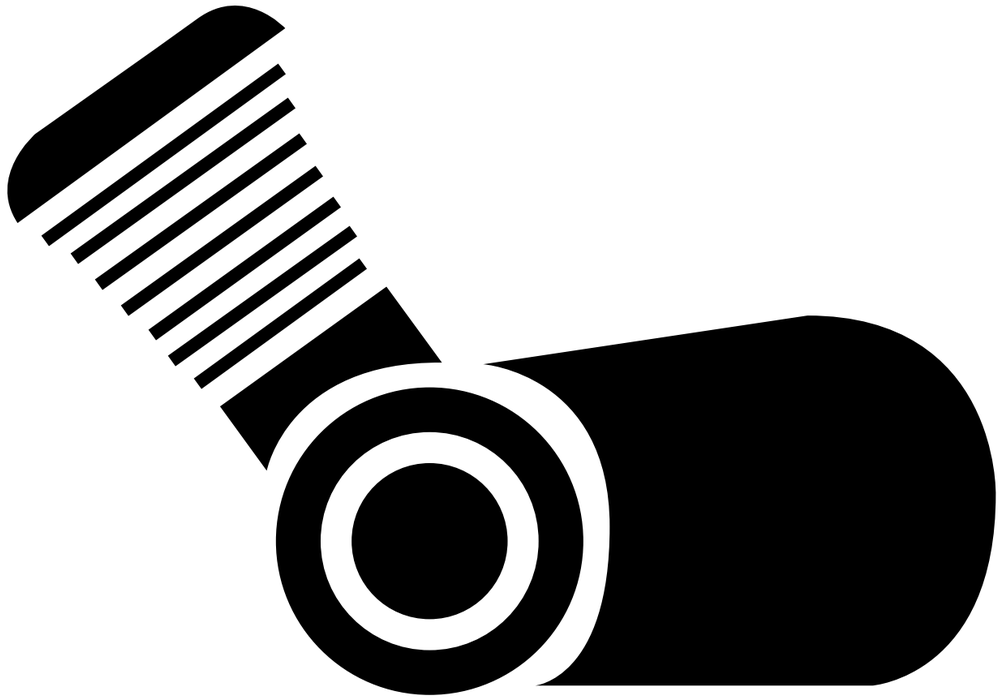

ENG 5

CHAPTER 5.
ENGINE

ENGINE

ENGINE REMOVAL

MUFFLER AND EXHAUST PIPES

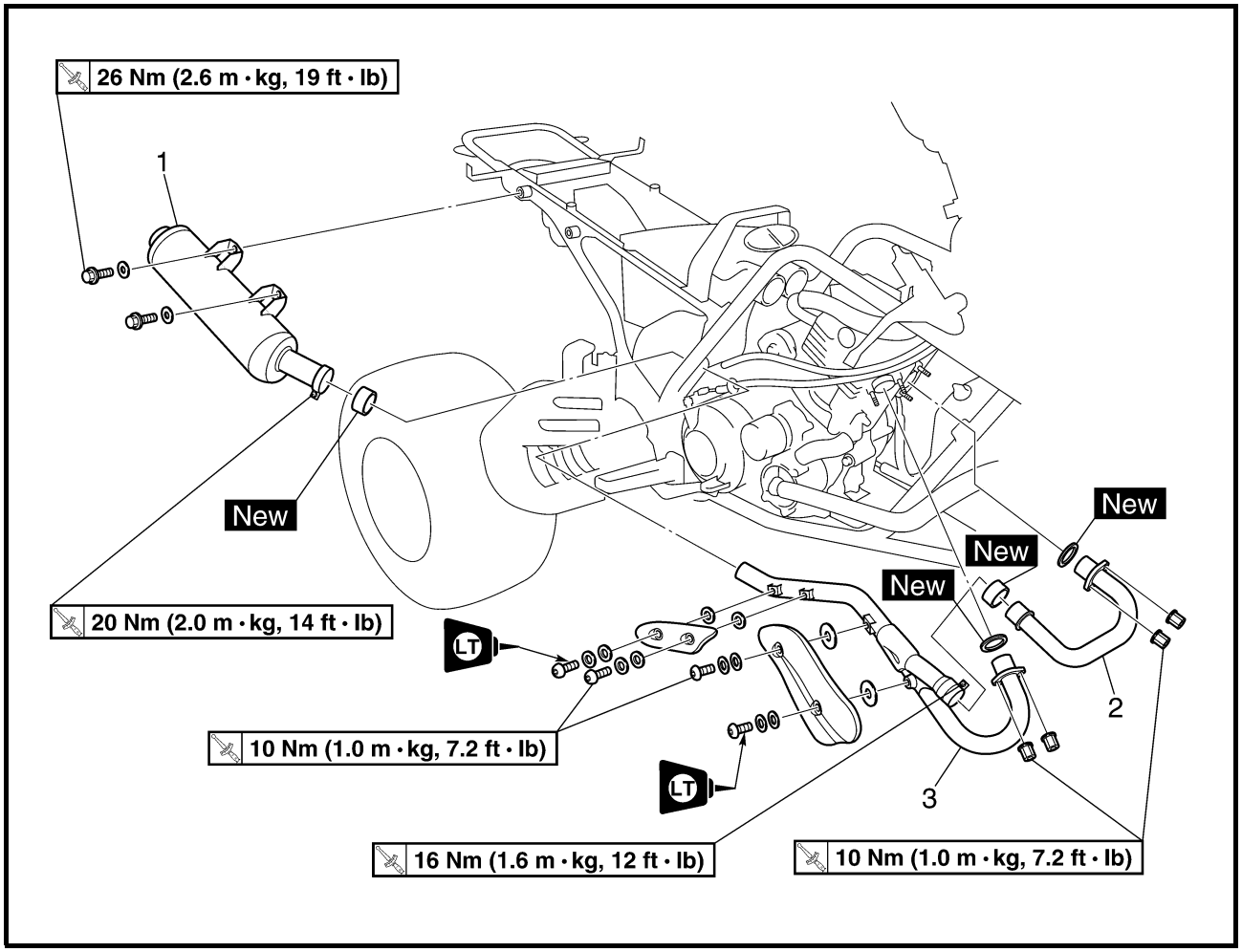

Order	Job name/Part name	Q'ty	Remarks
	Removing the muffler and exhaust pipes		Remove the parts in the order below.
	Seat/left footrest guard/engine		
	Skid plate		Refer to "SEAT, FENDERS AND FUEL TANK" in CHAPTER 3.
	Front and rear fenders		
	Fuel tank and rubber covers		
1	Muffler	1	
2	Exhaust pipe 1	1	
3	Exhaust pipe 2	1	
			For installation, reverse the removal procedure.

LEFT FOOTREST

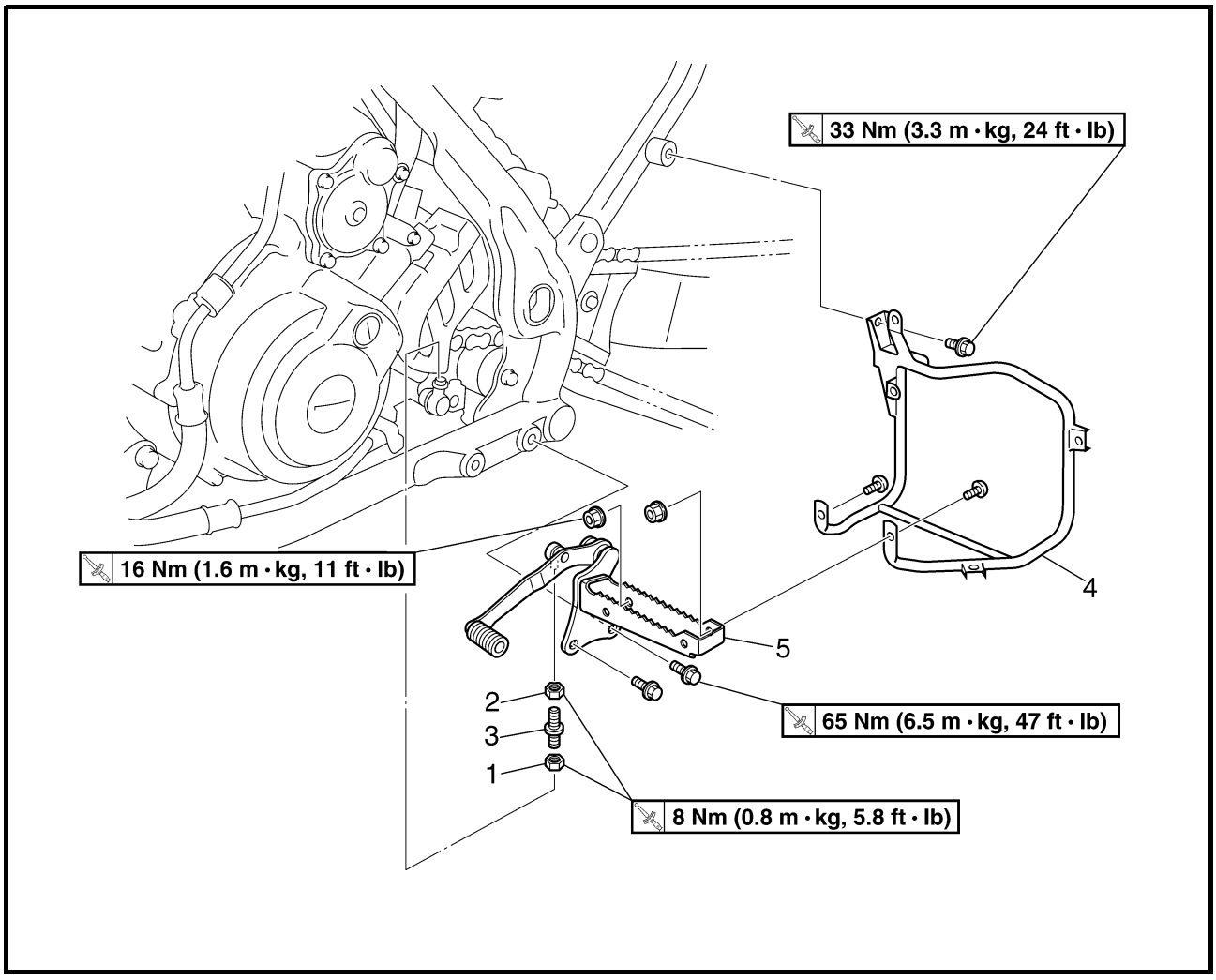

Order	Job name/Part name	Q'ty	Remarks
	Removing the left footrest		Remove the parts in the order below.
1	Locknut	1	
2	Locknut	1	Left-hand threads
3	Adjusting rod	1	
4	Left footrest guard bracket	1	
5	Left footrest	1	
			For installation, reverse the removal procedure.

LEADS, CABLES AND HOSES

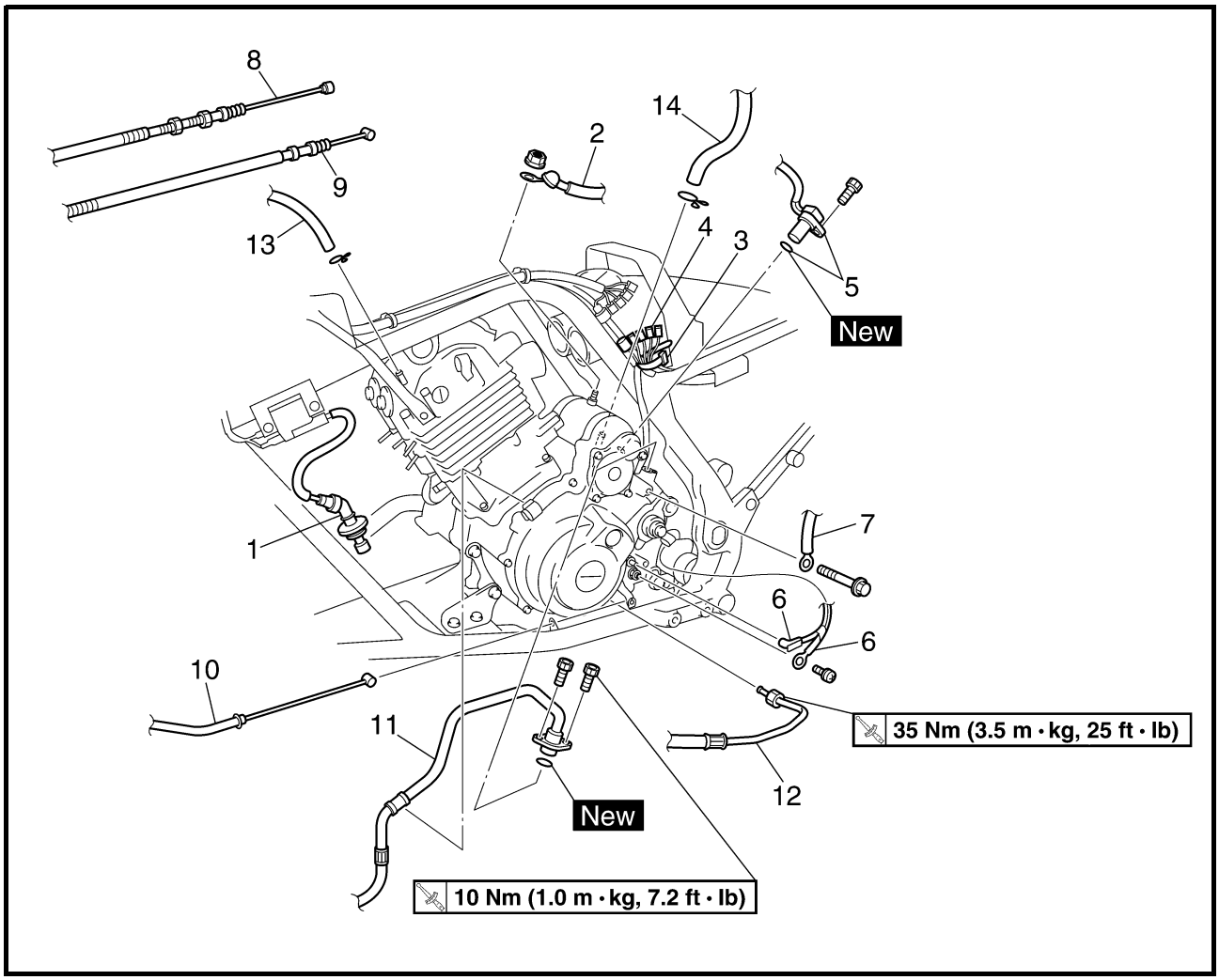

Order	Job name/Part name	Q'ty	Remarks
	Removing the leads, cables and hoses		Remove the parts in the order below.
	Engine oil		Drain.
	Coolant		Drain.
	Water jacket outlet pipe		Refer to "THERMOSTAT" in CHAPTER 6.
	Radiator outlet hose		Refer to "WATER PUMP" in CHAPTER 6.
	Carburetors		Refer to "CARBURETORS" in CHAPTER 7.
	Rear shock absorber and connecting arm		Refer to "REAR SHOCK ABSORBER AND RELAY ARM" in CHAPTER 4.
	Drive sprocket and swingarm		Refer to "SWINGARM AND DRIVE CHAIN" in CHAPTER 4.
1	Spark plug cap	1	
2	Starter motor lead	1	
3	Band	1	

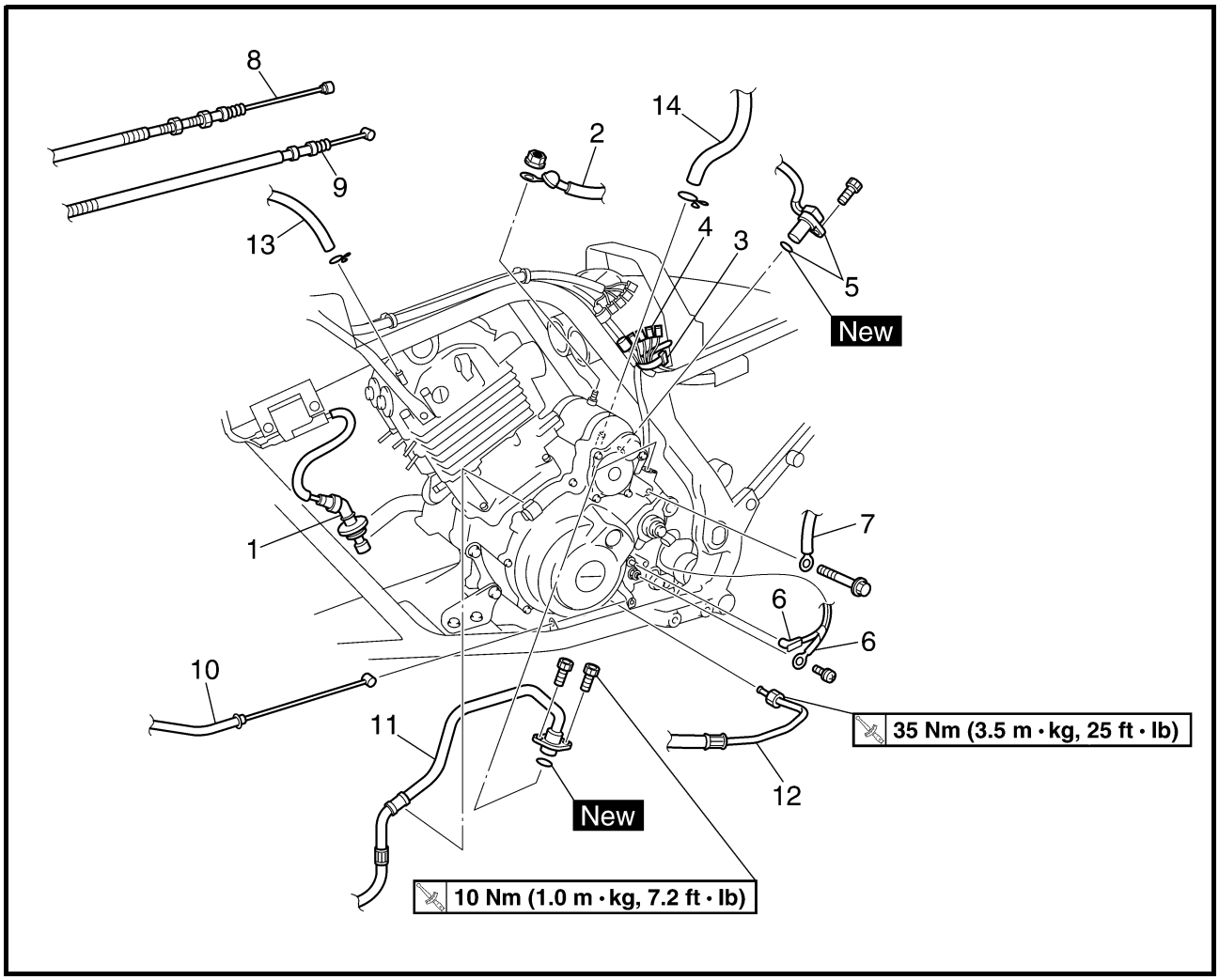

Order	Job name/Part name	Q'ty	Remarks
4	Coupler	5	Disconnect.
5	Speed sensor/O-ring	1/1	
6	Neutral switch lead/reverse switch lead	1/1	
7	Ground lead	1	
8	Clutch cable	1	
9	Parking brake cable	1	
10	Reverse control cable	1	
11	Oil pipe 2	1	Disconnect.
12	Oil pipe 1	1	Disconnect.
13	Oil tank breather hose	1	Disconnect.
14	Crankcase breather hose	1	Disconnect.
			For installation, reverse the removal procedure.

ENGINE MOUNTING BOLTS

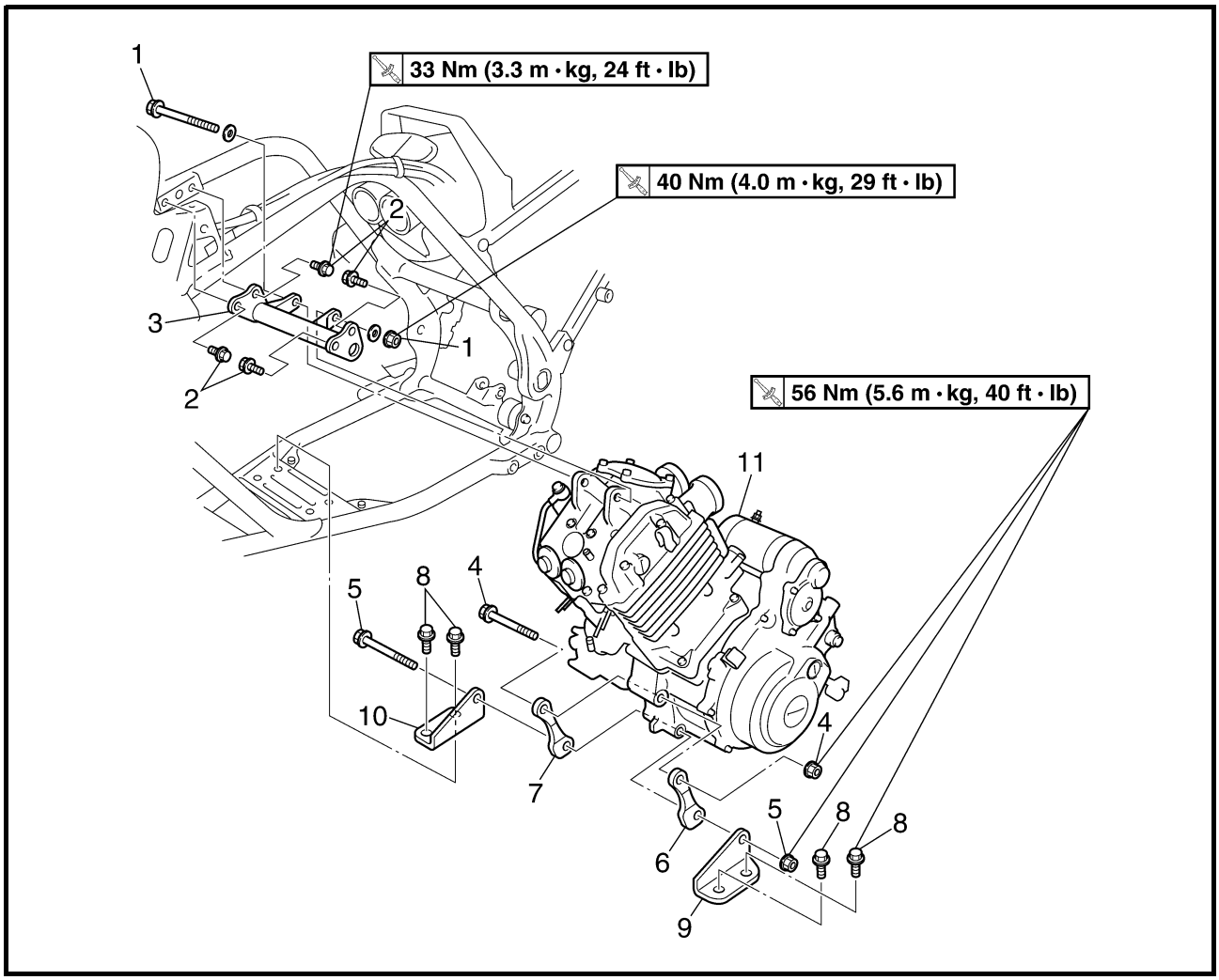

Order	Job name/Part name	Q'ty	Remarks
	Removing the engine mounting bolt		Remove the parts in the order below.
1	Engine mounting bolt (upper)/nut	1/1	
2	Engine bracket bolt (upper)	4	
3	Engine bracket (upper)	1	
4	Engine mounting bolt (middle)/nut	1/1	**CAUTION:**
5	Engine mounting bolt (lower)/nut	1/1	**Install all of the bolts/nuts and then tighten them to full torque specifications.**
6	Engine bracket (middle-left)	1	
7	Engine bracket (middle-right)	1	
8	Engine bracket bolt (lower)	4	Refer to "INSTALLING THE ENGINE".
9	Engine bracket (lower-left)	1	
10	Engine bracket (lower-right)	1	

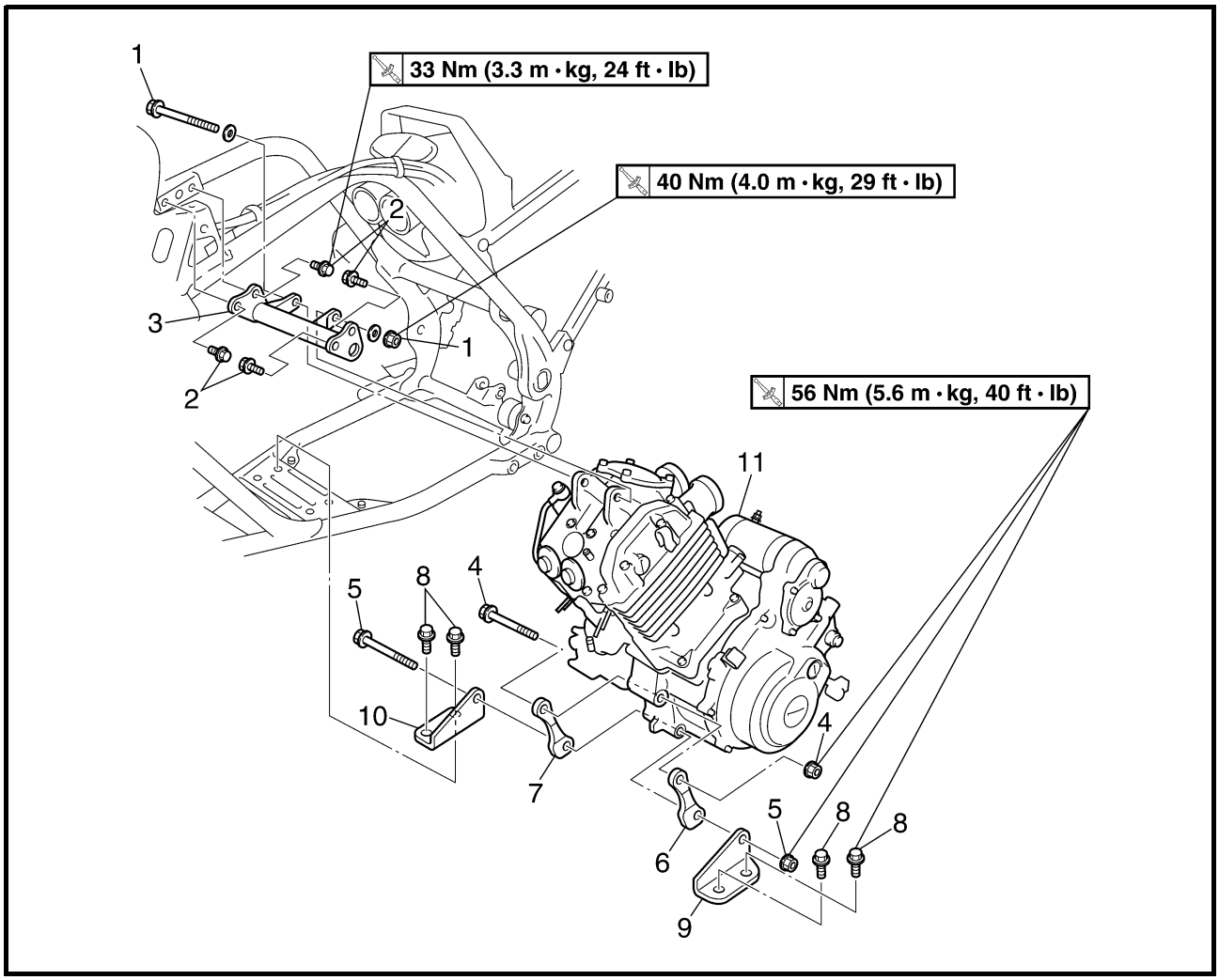

Order	Job name/Part name	Q'ty	Remarks
11	Engine assembly	1	**NOTE:** Remove the engine assembly from the left side of the machine. For installation, reverse the removal procedure.

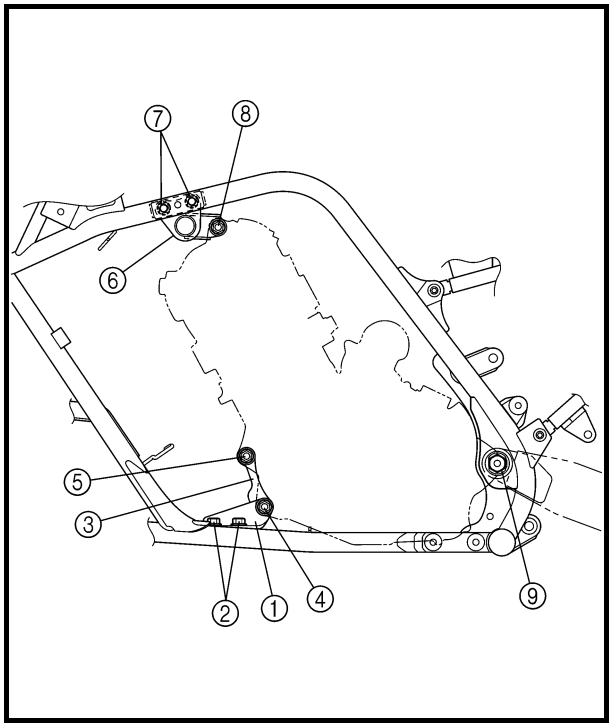

INSTALLING THE ENGINE

1.Install:
- Engine brackets (lower) ①
- Engine bracket bolts (lower) ②
- Engine brackets (middle) ③
- Engine mounting bolt (lower)/nut ④
- Engine mounting bolt (middle)/nut ⑤
- Engine bracket (upper) ⑥
- Engine bracket bolts (upper) ⑦
- Engine mounting bolt (upper)/nut ⑧

NOTE:
Do not fully tighten the bolts and nuts.

2.Install:
- Swingarm
- Pivot shaft/nut ⑨

NOTE:
Do not fully tighten the pivot shaft nut.

3.Tighten:
- Engine bracket bolt (lower) ②
  56 Nm (5.6 m • kg, 40 ft • lb)
- Engine bracket bolt (upper) ⑦
  33 Nm (3.3 m • kg, 24 ft • lb)
- Engine mounting bolt (lower)/nut ④
  56 Nm (5.6 m • kg, 40 ft • lb)
- Engine mounting bolt (middle)/nut ⑤
  56 Nm (5.6 m • kg, 40 ft • lb)
- Engine mounting bolt (upper)/nut ⑧
  40 Nm (4.0 m • kg, 29 ft • lb)
- Pivot shaft/nut ⑨
  95 Nm (9.5 m • kg, 68 ft • lb)

CYLINDER HEAD COVER

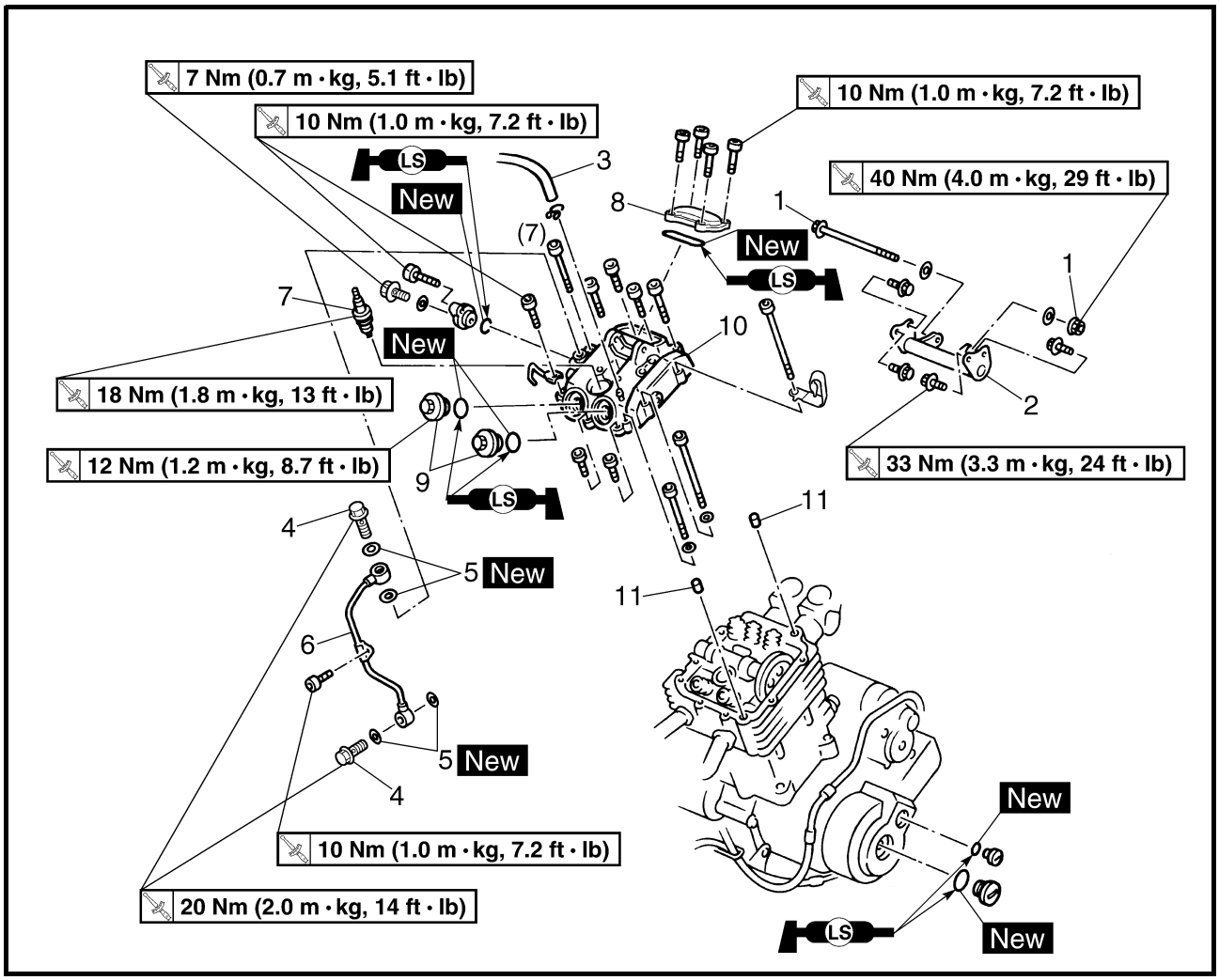

Order	Job name/Part name	Q'ty	Remarks
	Removing the cylinder head cover		Remove the parts in the order below.
	Seat/front fender Fuel tank/rubber cover 2		Refer to "SEAT, FENDERS AND FUEL TANK" in CHAPTER 3.
1	Engine mounting bolt/nut	1/1	
2	Engine bracket (front-upper)	1	
3	Oil tank breather hose	1	
4	Union bolt	2	
5	Copper washer	4	
6	Oil delivery pipe 1	1	
7	Spark plug	1	
8	Tappet cover (intake)	1	
9	Tappet cover (exhaust)	2	

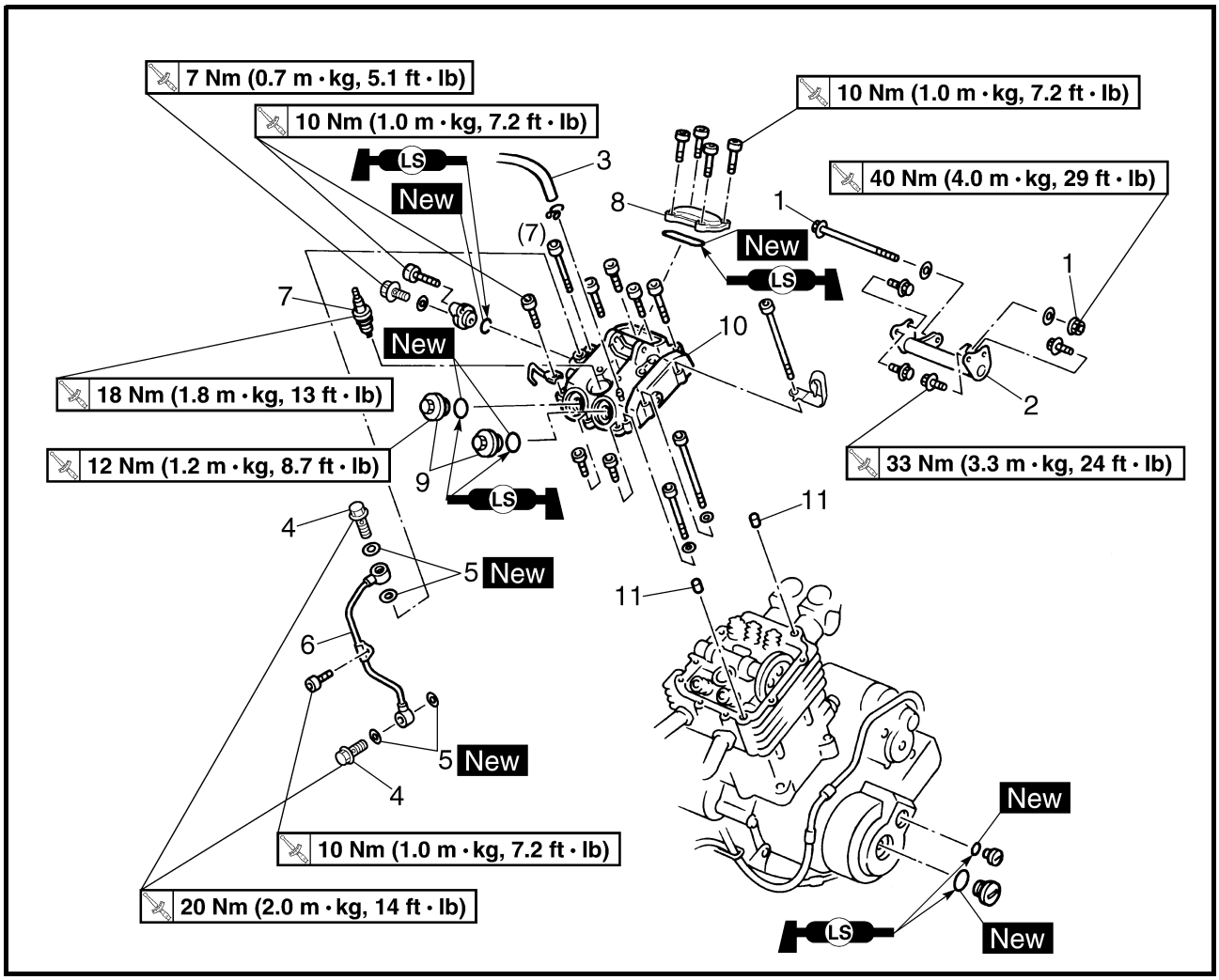

Order	Job name/Part name	Q'ty	Remarks
10	Cylinder head cover	1	Refer to "REMOVING/INSTALLING CYLINDER HEAD COVER".
11	Dowel pin	2	For installation, reverse the removal procedure.

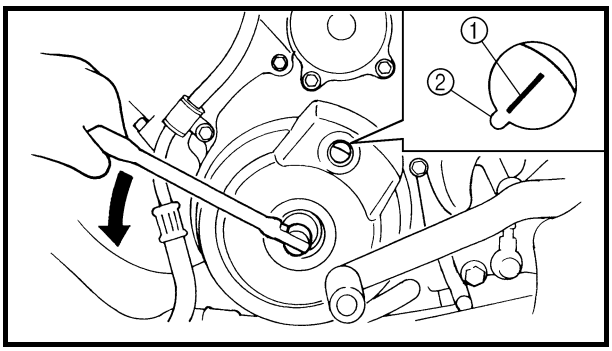

REMOVING THE CYLINDER HEAD COVER

1.Align:
- "I" mark
  (with stationary pointer)

****

Checking steps:
- Turn the crankshaft counterclockwise with a wrench.
- Align the "I" mark ① on the rotor with the stationary pointer ② on the crankcase cover. When the "I" mark is aligned with the stationary pointer, the piston is at the Top Dead Center (T.D.C.).

NOTE:
- When the piston is at the top dead center (T.D.C.) on the compression stroke, there should be clearance between the valve stem tips and their respective rocker arm adjusting screws.
- If there is no clearance, rotate the crankshaft counterclockwise one turn.

****

2.Remove:
- Cylinder head cover

NOTE:
Loosen each bolt 1/4 of a turn at a time, in stages and in a crisscross pattern. After all the bolts are loosened, remove them.

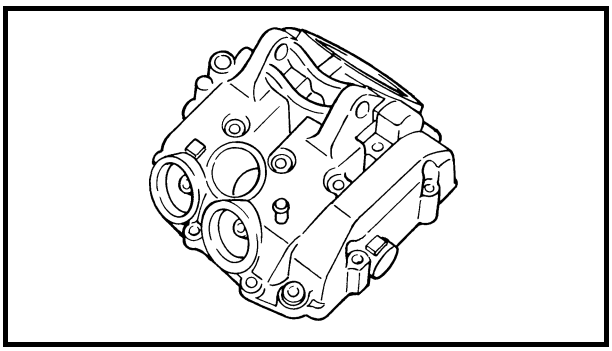

CHECKING THE CYLINDER HEAD COVER

1.Check:
- Cylinder head cover
  Cracks/damage → Replace the cylinder head cover and cylinder head as a set.

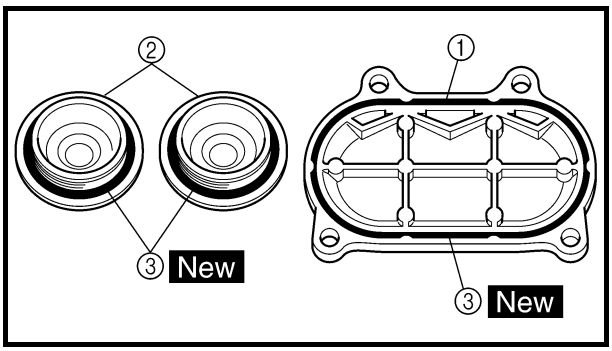

CHECKING THE TAPPET COVER

1.Check:
- Tappet cover (intake) ①
- Tappet cover (exhaust) ②
- O-ring ③ New

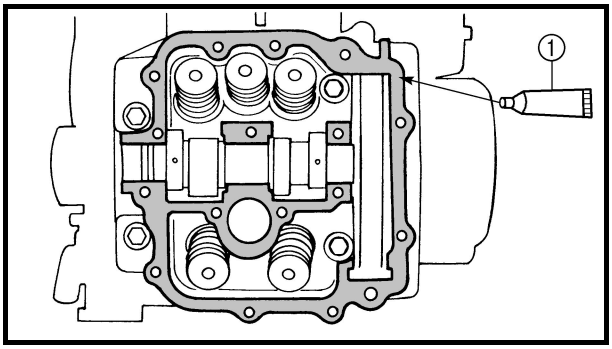

INSTALLING THE CYLINDER HEAD COVER

1.Apply:
- Sealant (Quick Gasket®) ①
  (to the mating surfaces of the cylinder head and cylinder head cover)

Sealant (Quick Gasket®) ①:
P/N. ACC-11001-05-01
Yamaha bond No. 1215®:
P/N. 90890-85505

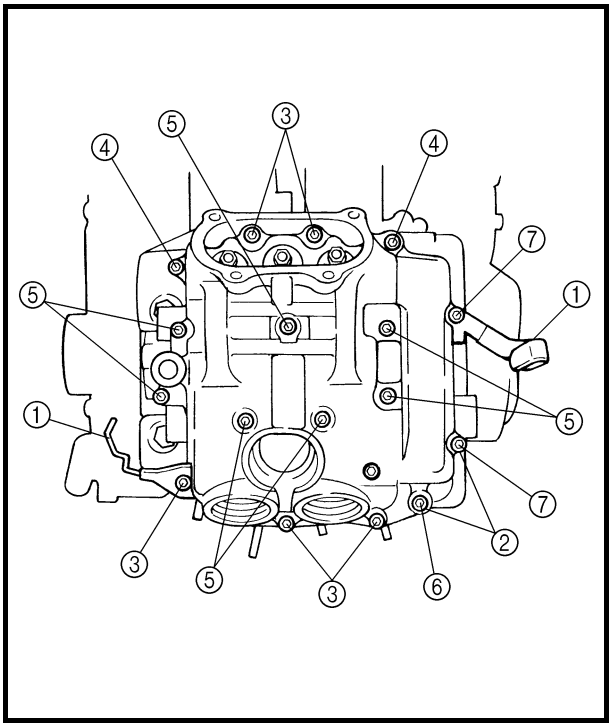

2.Install:
- Cylinder head cover
- Cable guides ①
- Washers ②
- Bolts **10 Nm (1.0 m • kg, 7.2 ft • lb)**

③ Bolt: ℓ = 25 mm
④ Bolt: ℓ = 40 mm
⑤ Bolt: ℓ = 55 mm
⑥ Bolt: ℓ = 115 mm
⑦ Bolt: ℓ = 130 mm

NOTE:
Tighten the cylinder head cover bolts in stages, using a crisscross pattern.

ROCKER ARMS

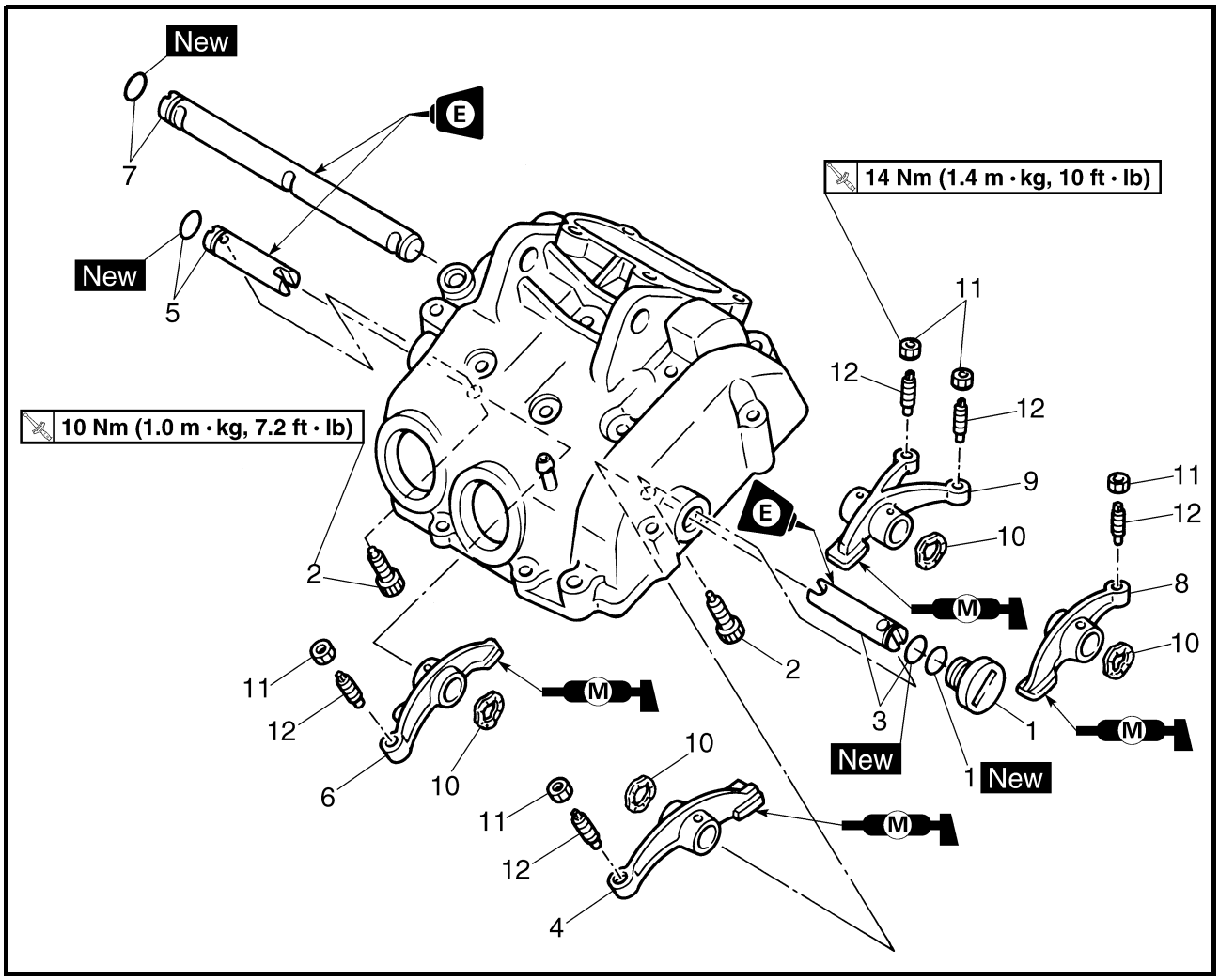

Order	Job name/Part name	Q'ty	Remarks
	Removing the rocker arm		Remove the parts in the order below.
	Cylinder head cover		Refer to "CYLINDER HEAD COVER".
1	Plug/O-ring	1/1	
2	Bolt	2	
3	Rocker arm shaft 2/O-ring	1/1	Refer to "REMOVING/INSTALLING THE ROCKER ARM".
4	Rocker arm 3	1	
5	Rocker arm shaft 3/O-ring	1/1	
6	Rocker arm 4	1	
7	Rocker arm shaft 1/O-ring	1/1	
8	Rocker arm 1	1	
9	Rocker arm 2	1	

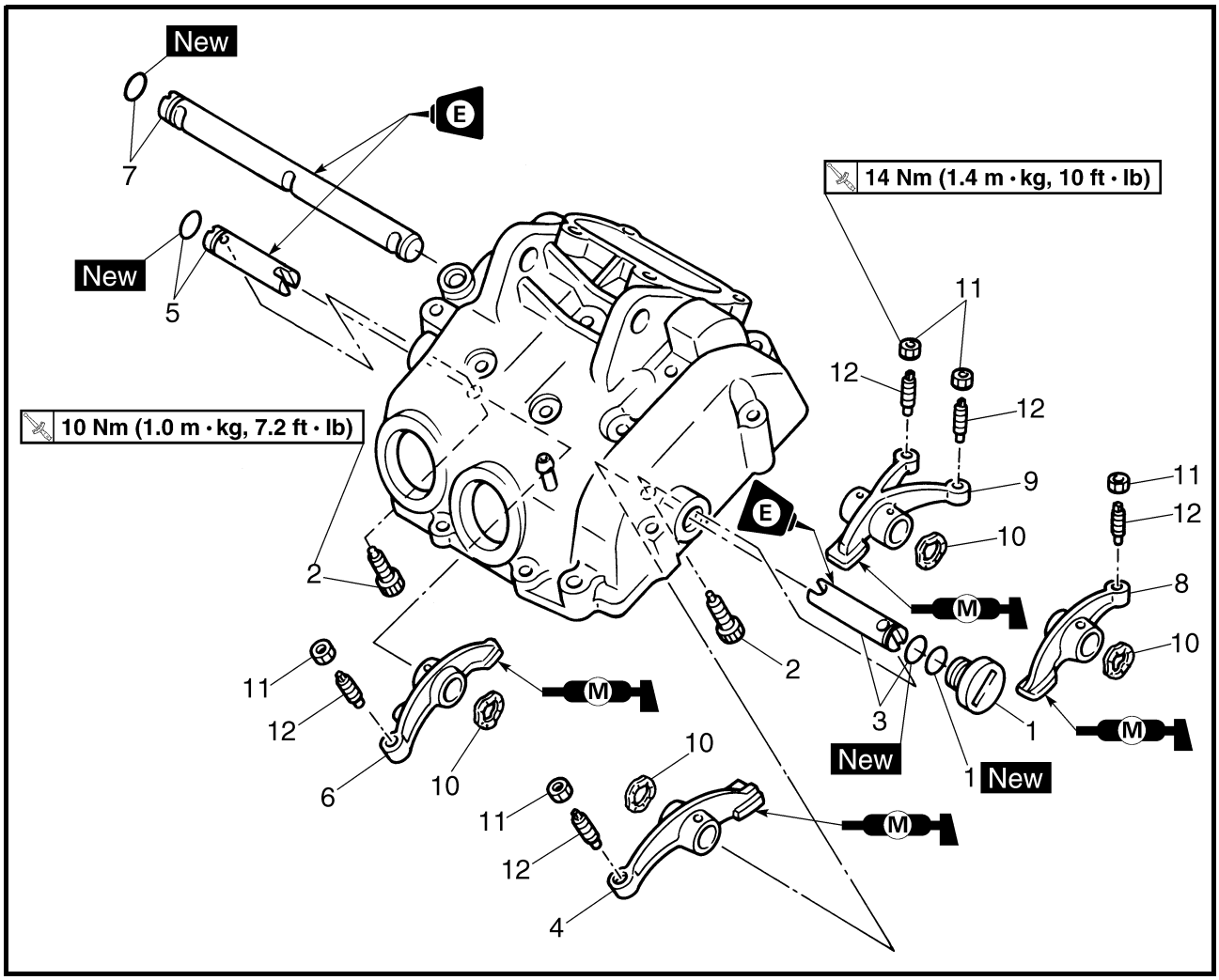

Order	Job name/Part name	Q'ty	Remarks
10	Spring	4	
11	Locknut	5	
12	Valve adjuster	5	
			For installation, reverse the removal procedure.

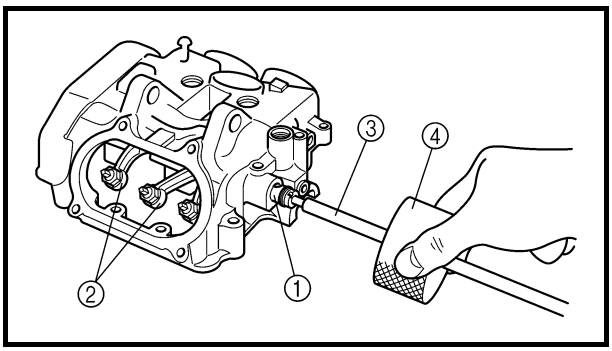

REMOVING THE ROCKER ARM

1.Remove:
- Rocker arm shafts ①
- Rocker arms ②

NOTE:
Use a slide hammer bolt ③ and weight ④ to remove the rocker arm shafts.

Slide hammer set:
P/N. YU-01083-A
Slide hammer bolt (M6):
P/N. 90890-01083
Weight:
P/N. 90890-01084

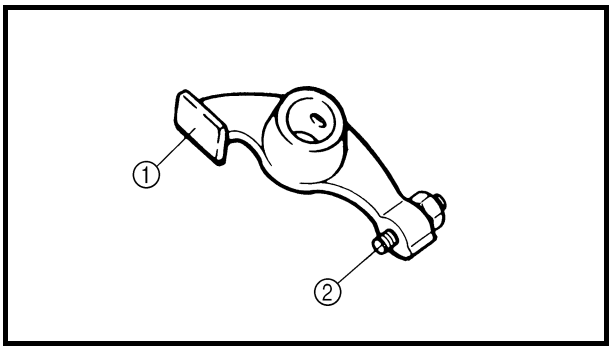

CHECKING THE ROCKER ARM

1.Check:
- Rocker arm lobes ①
- Valve adjusters ②
  Blue discoloration/pitting/scratches → Replace.

2.Check:
- Rocker arms
- Rocker arm shafts
  Damage/wear → Replace.

****

Checking steps:
- Check the two contact areas on the rocker arms for signs of abnormal wear.
  1) Rocker arm shaft hole.
  2) Camshaft lobe contact surface.
  Excessive wear → Replace.
- Check the surface of the rocker arm shafts.
  Blue discoloration/pitting/scratches → Replace/check lubrication.
- Measure the inside diameter ⓐ of the rocker arm holes.
  Out of specification → Replace.

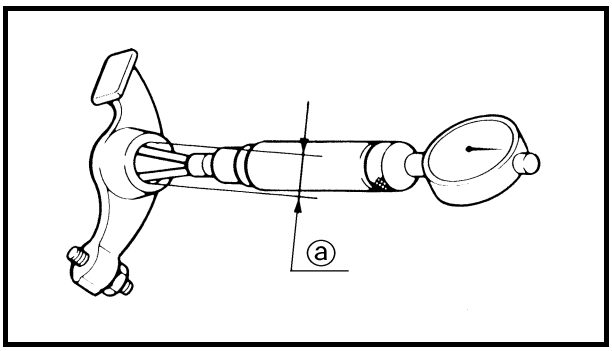

Rocker arm inside diameter:
12.000 ~ 12.018 mm
(0.4724 ~ 0.4731 in)

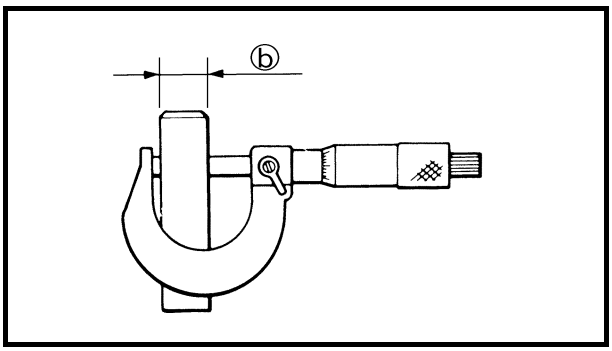

- Measure the outside diameter ⓑ of the rocker arm shafts.
  Out of specification → Replace.

Rocker arm outside diameter:
11.976 ~ 11.991 mm
(0.4715 ~ 0.4721 in)

- Calculate the clearance by subtracting the rocker arm shaft outside diameter from the rocker arm inside diameter.
  Clearance greater than 0.08 mm (0.003 in) → Replace the defective part(s).

Rocker arm to shaft standard clearance:
0.009 ~ 0.042 mm
(0.0004 ~ 0.0017 in)

****

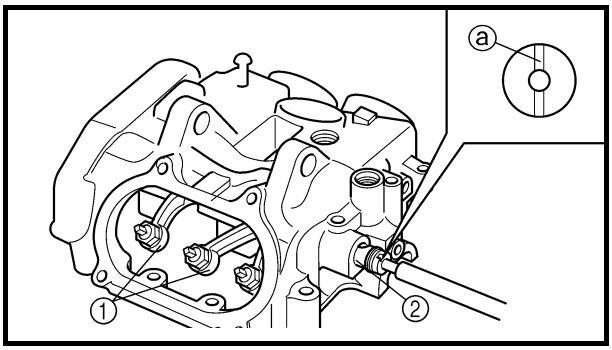

INSTALLING THE ROCKER ARM

1.Apply:
- Engine oil
  (onto the rocker arm shafts)

2.Install:
- Rocker arms ①
- Rocker arm shafts ②

NOTE:
- The thread hole ⓐ of the rocker arm shaft must face to the outside.
- After installation, make sure that the thread hole ⓐ of the rocker arm shaft is positioned correctly, as shown in the illustration.

CAMSHAFT AND CYLINDER HEAD

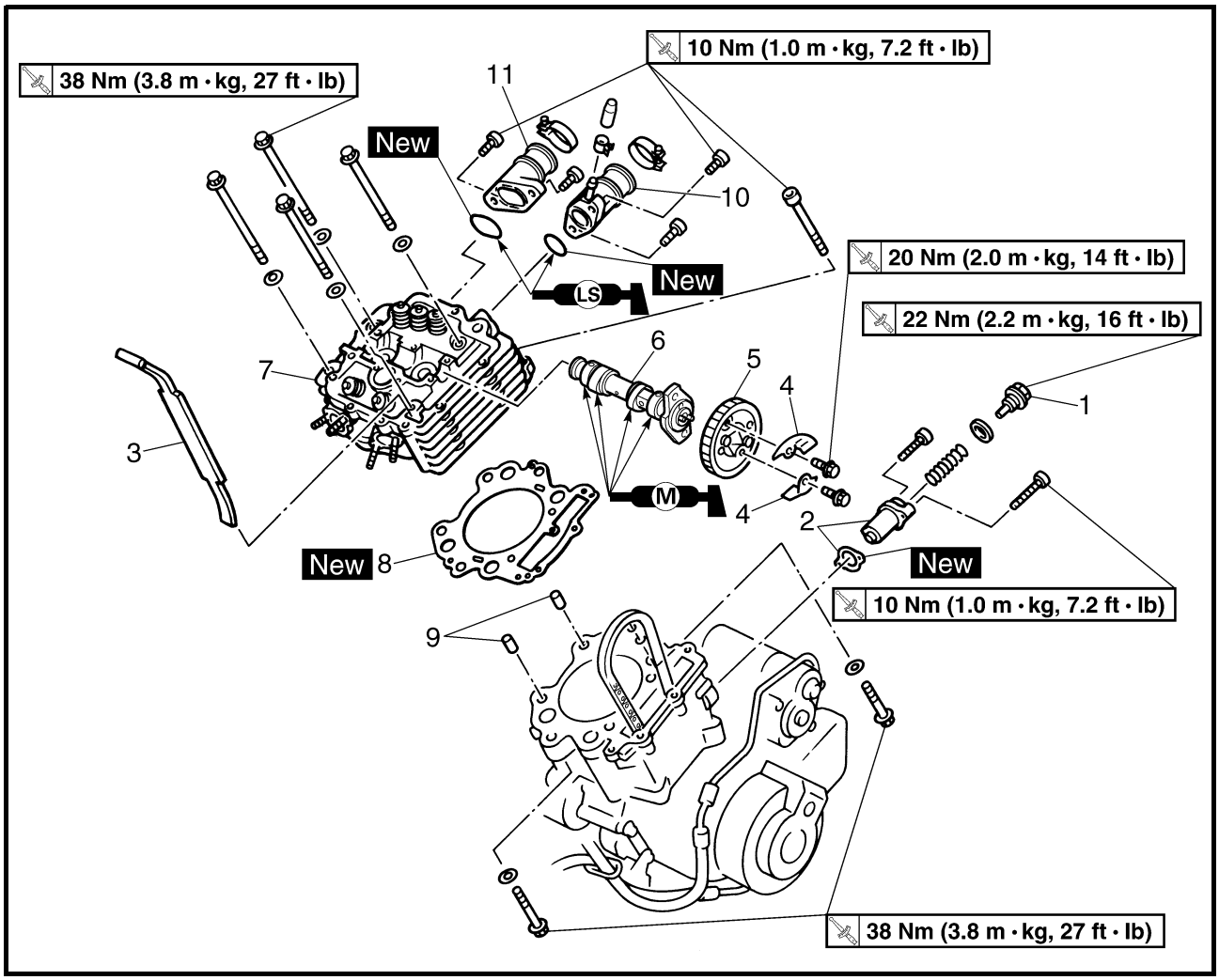

Order	Job name/Part name	Q'ty	Remarks
	Removing the camshaft and cylinder head		Remove the parts in the order below.
	Seat/front fender		Refer to "SEAT, FENDERS AND FUEL TANK" in CHAPTER 3.
	Fuel tank/rubber covers		
	Carburetors		Refer to "CARBURETORS" in CHAPTER 7.
	Water jacket outlet pipe		Refer to "THERMOSTAT" in CHAPTER 6.
	Muffler/exhaust pipe		Refer to "ENGINE REMOVAL".
	Cylinder head cover		Refer to "CYLINDER HEAD COVER".
1	Timing chain tensioner cap bolt	1	Refer to "REMOVING/INSTALLING THE CAMSHAFT AND CYLINDER HEAD".
2	Timing chain tensioner/gasket	1/1	
3	Timing chain guide (exhaust)	1	
4	Decompressor cam guide plate	2	
5	Camshaft sprocket	1	

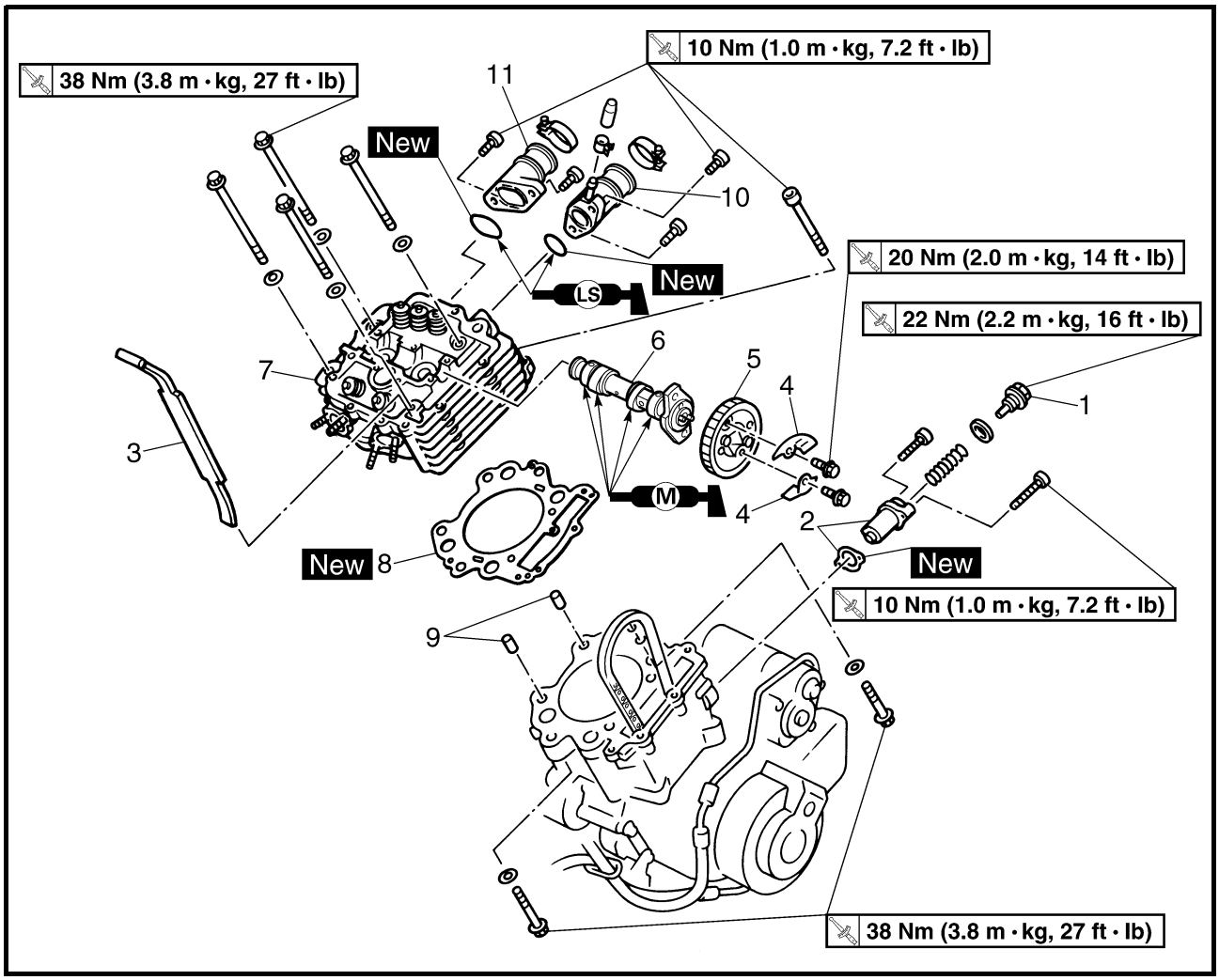

Order	Job name/Part name	Q'ty	Remarks
6	Camshaft	1	Refer to "CAMSHAFT AND CYLINDER HEAD".
7	Cylinder head	1	
8	Cylinder head gasket	1	
9	Dowel pin	2	
10	Carburetor joint 1	1	
11	Carburetor joint 2	1	
			For installation, reverse the removal procedure.

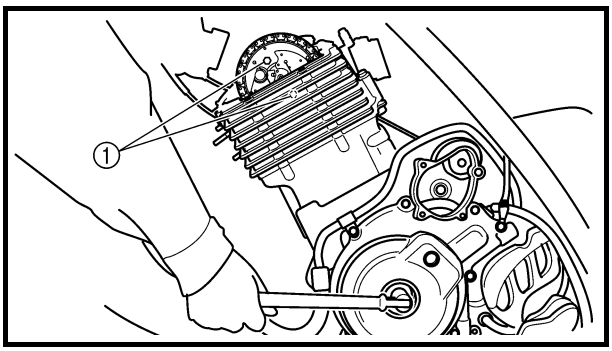

REMOVING THE CAMSHAFT AND CYLINDER HEAD

1.Loosen:
- Camshaft sprocket bolts ①

2.Loosen:
- Timing chain tensioner cap bolt

3.Remove:
- Timing chain tensioner
- Timing chain guide (exhaust)
- Decompressor cam guide plates
- Camshaft sprocket

NOTE:
- Fasten a safety wire to the timing chain to prevent it from falling into the crankcase.
- When removing the camshaft sprocket, it is not necessary to separate the timing chain.

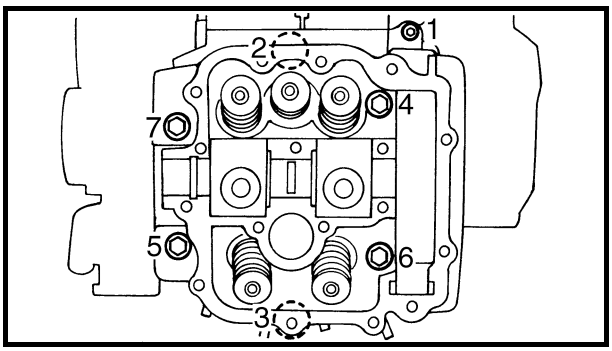

4.Remove:
- Cylinder head

NOTE:
- Loosen the bolts in the proper sequence.
- Follow the numerical order shown in the illustration. Loosen each bolt 1/4 of a turn at a time until all of the bolts are loose.

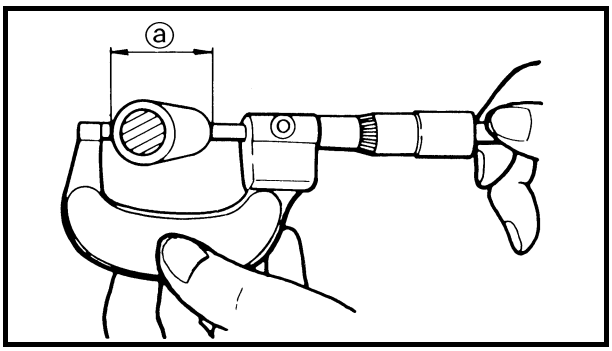

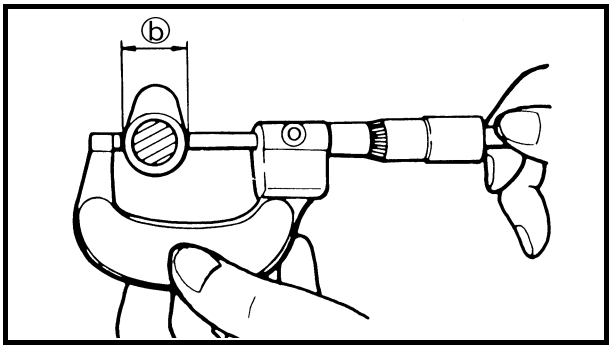

CHECKING THE CAMSHAFT

1.Check:
- Cam lobes
  Pitting/scratches/blue discoloration → Replace.

2.Measure:
- Cam lobes length ⓐ and ⓑ.
  Out of specification → Replace.

Camshaft lobe limit:
Intake:
ⓐ 35.59 mm (1.4012 in)
ⓑ 30.05 mm (1.1831 in)
Exhaust:
ⓐ 36.40 mm (1.4331 in)
ⓑ 30.05 mm (1.1831 in)

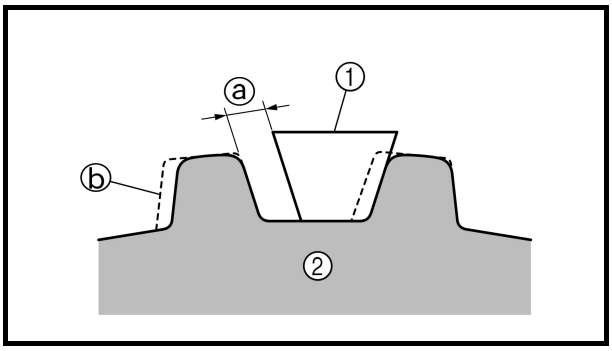

CHECKING THE CAMSHAFT SPROCKET

1.Check:
- Camshaft sprocket
  Wear/damage → Replace the camshaft sprocket and timing chain as a set.

ⓐ 1/4 of a tooth
ⓑ Correct
① Timing chain
② Sprocket

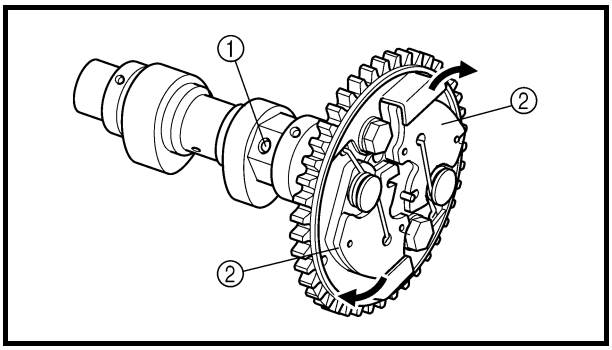

CHECKING THE DECOMPRESSION SYSTEM

1.Check:
- Decompression system

****

Checking steps:

Check while the camshaft sprocket is installed on the camshaft.
- Check that the decompressor lever pin ① projects from the camshaft.
- Check that the decompressor cam ② moves smoothly.

****

CHECKING THE TIMING CHAIN GUIDE

1.Check:

- Exhaust side timing chain guide
  Wear/damage → Replace.

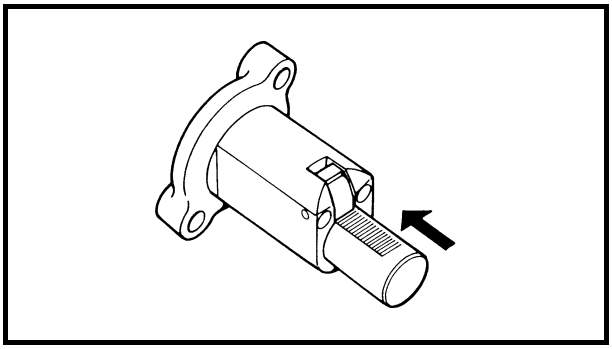

CHECKING THE TIMING CHAIN TENSIONER

1.Check:

- One-way cam operation (tensioner)
  Unsmooth operation → Replace.

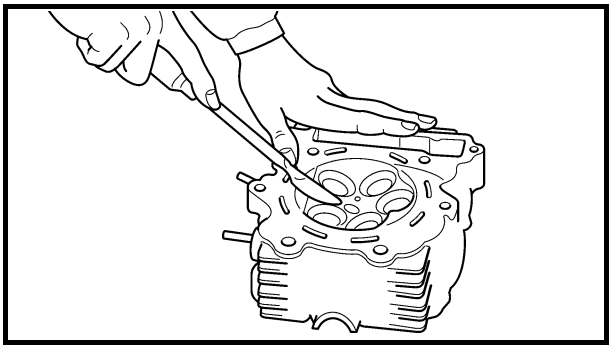

CHECKING THE CYLINDER HEAD

1.Eliminate:

- Carbon deposits (from the combustion chambers)
  Use a rounded scraper.

NOTE:

Do not use a sharp instrument to avoid damaging or scratching:

- Spark plug threads
- Valve seats

2.Check:

- Cylinder head
  Scratches/damage → Replace the cylinder head cover and cylinder head as a set.
- Cylinder head water jacket
  Mineral deposits/rust → Eliminate.

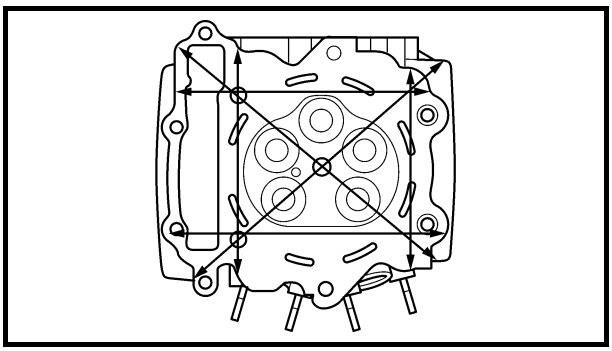

3.Measure:
- Cylinder head warpage
  Out of specification → Resurface.

	Cylinder head warpage: Less than 0.05 mm (0.002 in)

****

Warpage measurement and resurfacing steps:
- Place a straightedge and a feeler gauge across the cylinder head.
- Use a feeler gauge to measure the warpage.
- If the warpage is out of specification, resurface the cylinder head.
- Place a 400 ~ 600 grit wet sandpaper on the surface plate, and resurface the head using a figure-eight sanding pattern.

NOTE:
To ensure an even surface rotate the cylinder head several times.

****

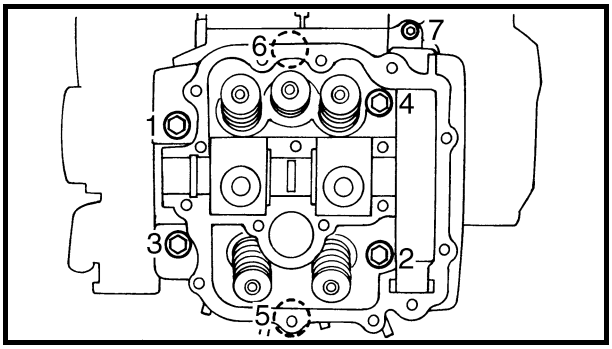

INSTALLING THE CAMSHAFT AND CYLINDER HEAD

1.Install:
- Cylinder head
- Bolts (M9 : 1 ~ 6) **38 Nm (3.8 m · kg, 27 ft · lb)**
- Bolt (M6 : 7) **10 Nm (1.0 m · kg, 7.2 ft · lb)**

NOTE:
- Tighten the bolts in the proper sequence.
- Follow the numerical order shown in the illustration. Tighten the bolts in two stages.

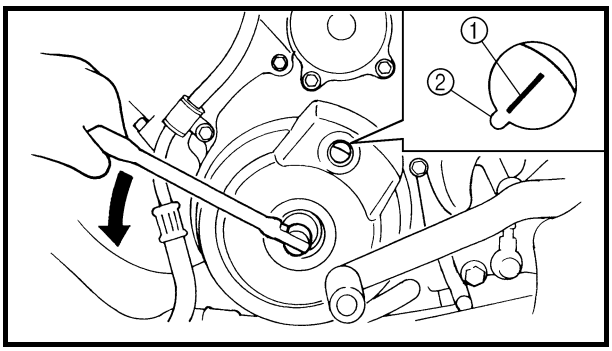

2.Install:
- Camshaft
- Camshaft sprocket

****

Installation steps:
- Turn the crankshaft counterclockwise with a wrench.
- Align the “I” mark ① on the rotor with the stationary pointer ② on the crankcase cover. When the “I” mark is aligned with the stationary pointer, the piston is at the Top Dead Center (T.D.C.).

CAUTION:

Do not turn the crankshaft during the camshaft installation.

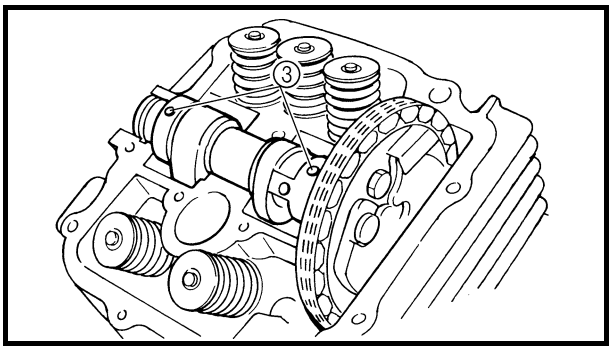

- Temporarily install the camshaft sprocket on the camshaft. (Do not install the bolts.) Then, install the timing chain on the camshaft sprocket.

NOTE:

Make sure the small holes ③ on the camshaft face upward.

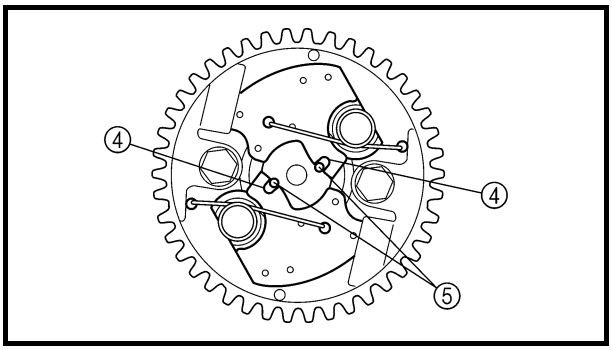

- Align the notches ④ on the decompressor cams with the projections ⑤ on the decompressor spring lever, then install the camshaft sprocket on the camshaft.

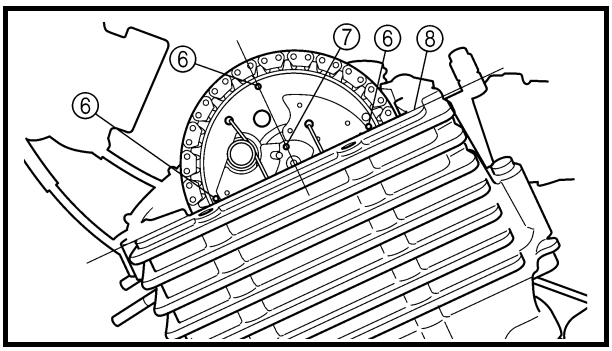

NOTE:

Check that each part is positioned as shown in the illustration.

⑥ Small holes on camshaft sprocket
⑦ Punch mark on decompressor spring lever
⑧ Top front of cylinder head

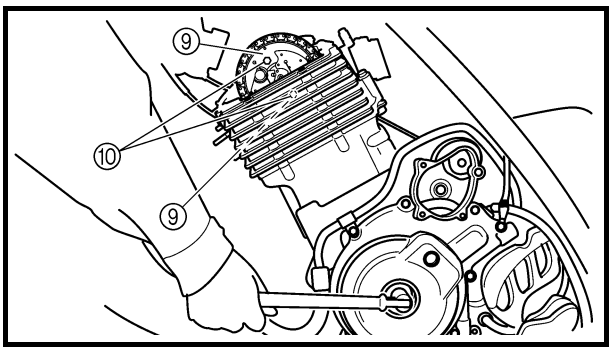

- Install the decompressor cam guide plates ⑨ and camshaft sprocket bolts ⑩.

	Camshaft sprocket bolt: 20 Nm (2.0 m • kg, 14 ft • lb)

- Remove the retaining wire.

****

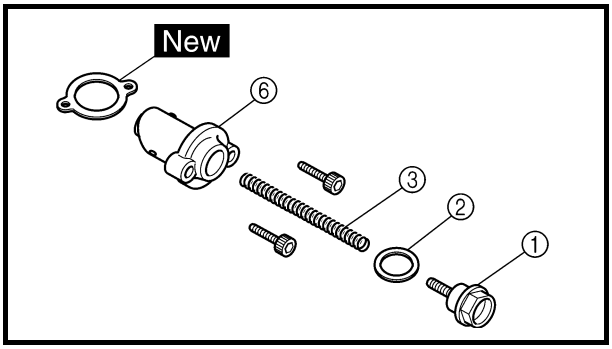

3.Install:
- Timing chain tensioner

****

Installation steps:
- Remove the timing chain tensioner cap bolt ①, washer ② and spring ③.
- Release the timing chain tensioner one-way cam ④ and push the tensioner rod ⑤ all the way in.
- Install the tensioner ⑥ with a new gasket into the cylinder.

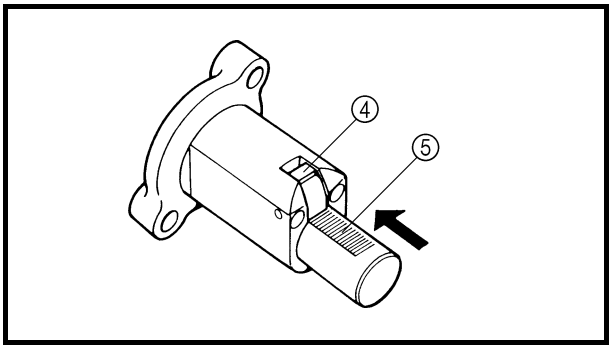

	Bolts (timing chain tensioner): 10 Nm (1.0 m • kg, 7.2 ft • lb)

⚠ WARNING

Always use a new gasket.

- Install the spring, washer and timing chain tensioner cap bolt.

	Timing chain tensioner cap bolt: 22 Nm (2.2 m • kg, 16 ft • lb)

****

4.Check:
- Small holes on camshaft sprocket
- Rotor “I” mark
  Out of alignment → Adjust.

VALVES AND VALVE SPRINGS

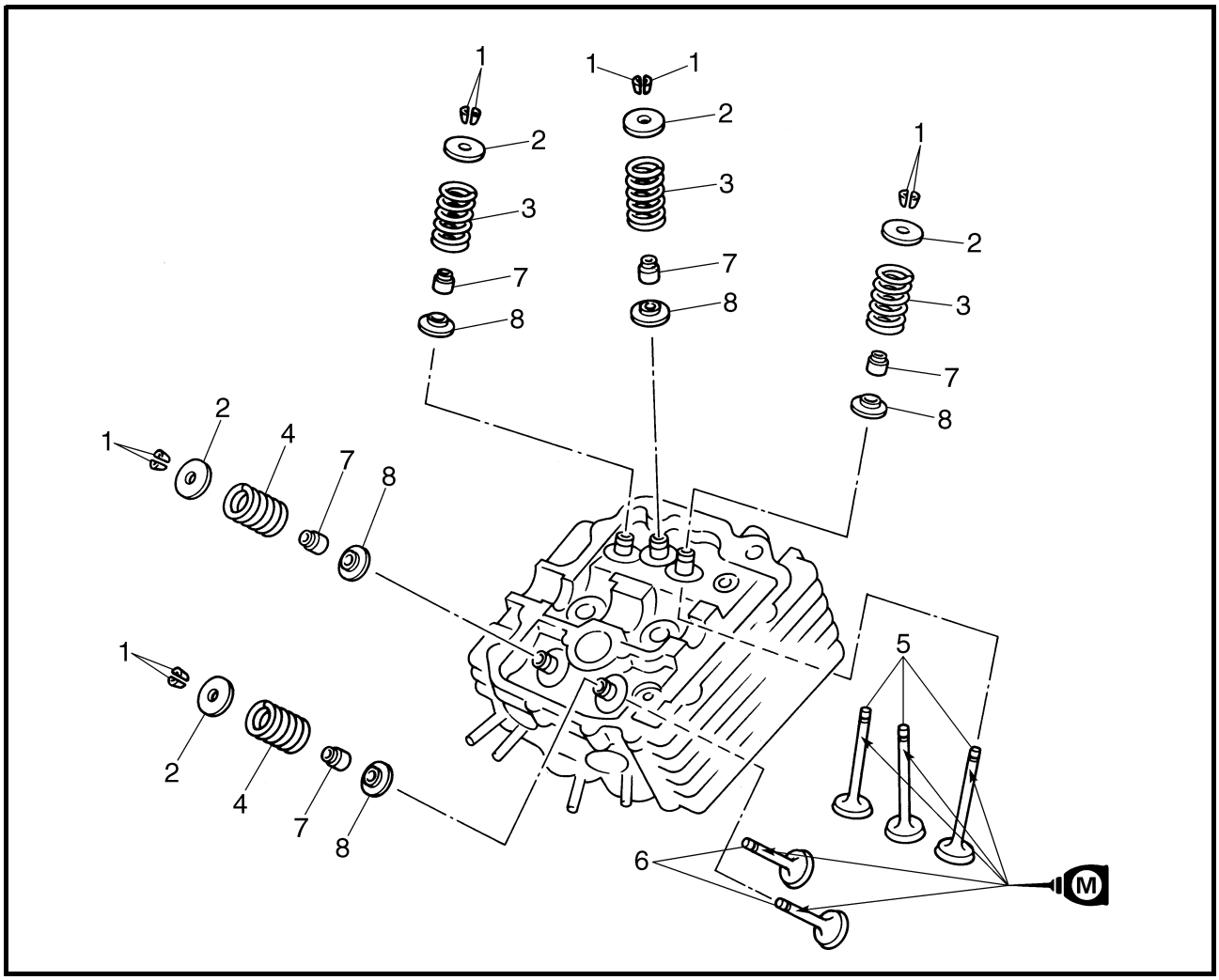

Order	Job name/Part name	Q'ty	Remarks
	Removing the valve and valve spring		Remove the parts in the order below.
	Cylinder head		Refer to "CAMSHAFT AND CYLINDER HEAD".
1	Valve cotter	10	
2	Valve spring retainer	5	
3	Intake valve spring	3	
4	Exhaust valve spring	2	Refer to "REMOVING/INSTALLING THE VALVE AND VALVE SPRING".
5	Intake valve	3	
6	Exhaust valve	2	
7	Valve stem seal	5	
8	Valve spring seat	5	
			For installation, reverse the removal procedure.

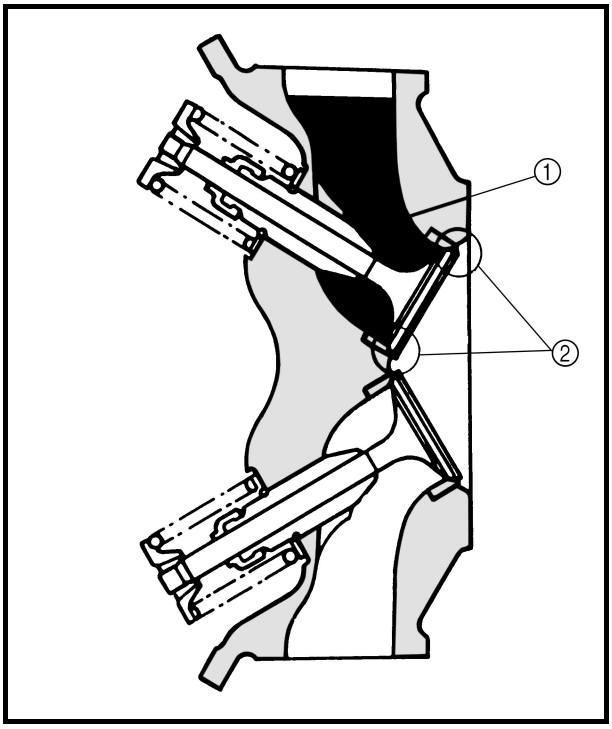

REMOVING THE VALVE AND VALVE SPRING

1.Check:

- Valve sealing
  Leakage at the valve seat → Inspect the valve face, valve seat and valve seat width.
  Refer to “VALVE AND VALVE SPRING INSPECTION”.

****

Checking steps:

- Pour a clean solvent ① into the intake and exhaust ports.
- Check that the valve seals properly.
  There should be no leakage at the valve seat ②.

****

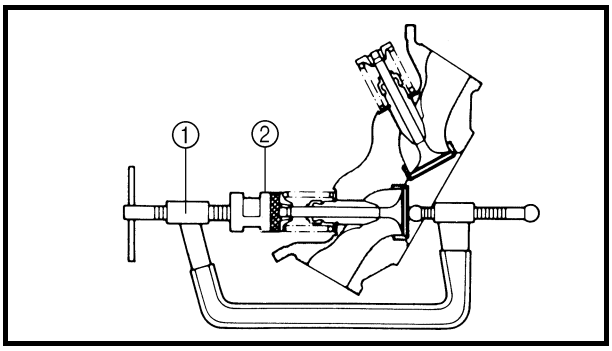

2.Remove:

- Valve cotters

NOTE:

Attach a valve spring compressor ① and attachment ② between the valve spring retainer and the cylinder head to remove the valve cotters.

Valve spring compressor:
P/N. YM-04019, 90890-04019
Valve spring compressor attachment:
P/N. 90890-01243

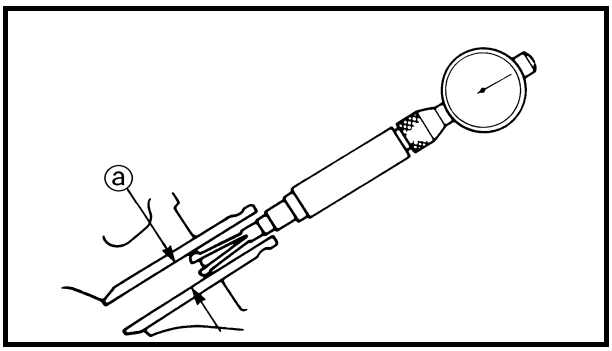

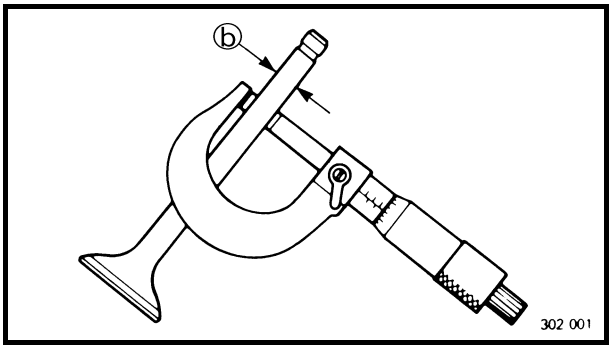

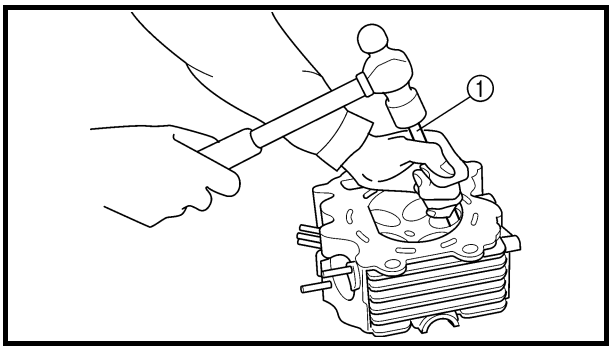

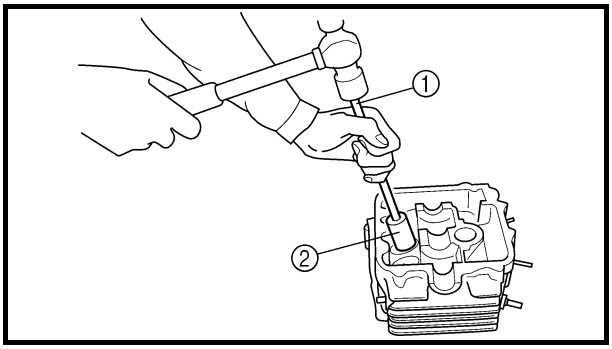

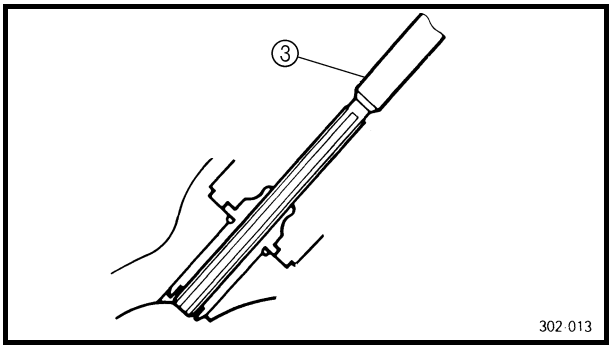

CHECKING THE VALVE AND VALVE SPRING

1.Measure:

- Stem-to-guide clearance

Stem-to-guide clearance =
valve guide inside diameter ⓐ –
valve stem diameter ⓑ

Out of specification → Replace the valve guide.

Clearance (stem to guide):
Intake:
0.010 ~ 0.037 mm
(0.0004 ~ 0.0015 in)
<Limit>: 0.08 mm (0.0031 in)
Exhaust:
0.025 ~ 0.052 mm
(0.0010 ~ 0.0020 in)
<Limit>: 0.10 mm (0.0039 in)

2.Replace:

- Valve guide

****

Replacement steps:

NOTE:
To ease guide removal, installation and to maintain correct fit, heat the cylinder head to 100 °C (212 °F) in an oven.

- Remove the valve guide using a valve guide remover ①.
- Install the new valve guide using a valve guide remover ① and valve guide installer ②.
- After installing the valve guide, bore the valve guide using a valve guide reamer ③ to obtain proper stem-to-guide clearance.

Valve guide remover (ø 6):
P/N. YM-4064-A, 90890-04064
Valve guide installer (ø 6):
P/N. YM-04065-A, 90890-04065
Valve guide reamer (ø 6):
P/N. YM-04066, 90890-04066

NOTE:
After replacing the valve guide reface the valve seat.

****

3.Check:
- Valve face
  Pitting/wear → Grind the face.
- Valve stem end
  Mushroom shape or diameter larger than the body of the stem → Replace.

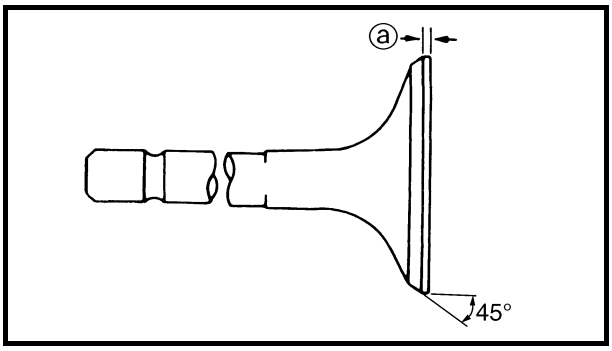

4.Measure:
- Margin thickness ⓐ
  Out of specification → Replace.

Margin thickness:
Intake:
0.85 ~ 1.15 mm
(0.0335 ~ 0.0453 in)
Exhaust:
0.85 ~ 1.15 mm
(0.0335 ~ 0.0453 in)

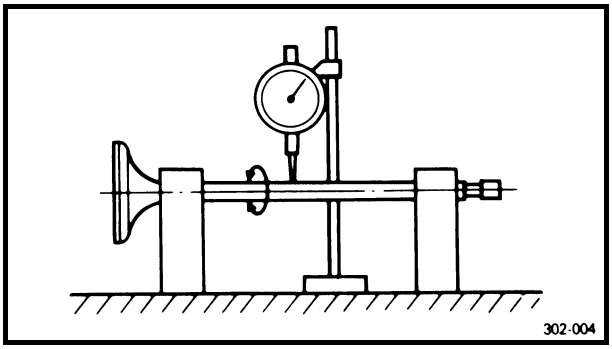

5.Measure:
- Runout (valve stem)
  Out of specification → Replace.

Runout limit:
0.01 mm (0.0004 in)

NOTE:
- When installing a new valve always replace the guide.
- If the valve is removed or replaced always replace the oil seal.

6.Eliminate:
- Carbon deposits
  (from the valve face and valve seat)

7.Check:
- Valve seats
  Pitting/wear → Reface the valve seat.

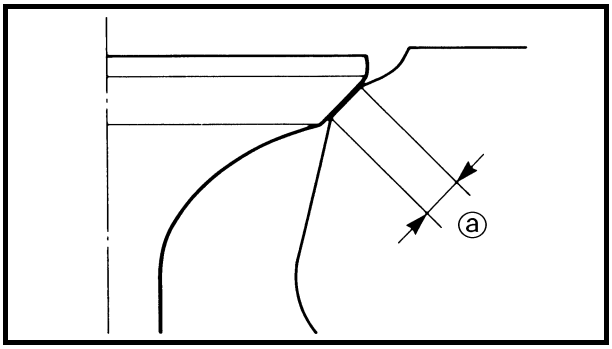

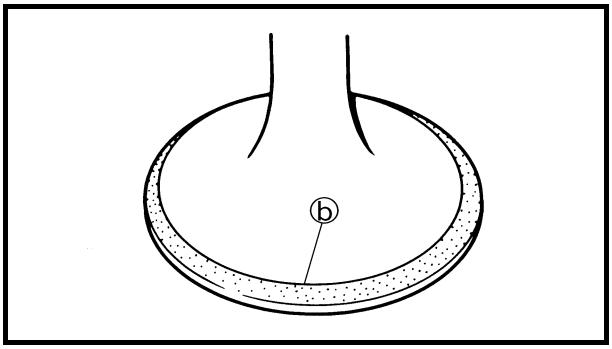

8.Measure:
- Valve seat width ⓐ
  Out of specification → Reface the valve seat.

Valve seat width:
Intake:
0.9 ~ 1.1 mm
(0.0354 ~ 0.0433 in)
<Limit>: 1.6 mm (0.0630 in)
Exhaust:
0.9 ~ 1.1 mm
(0.0354 ~ 0.0433 in)
<Limit>: 1.6 mm (0.0630 in)

****

Measurement steps:
- Apply Mechanic's blueing dye (Dykem) ⓑ to the valve face.
- Install the valve into the cylinder head.
- Press the valve through the valve guide and onto the valve seat to make a clear pattern.
- Measure the valve seat width. Where the valve seat and valve face made contact, blueing will have been removed.
- If the valve seat is too wide, too narrow, or the seat is not centered, the valve seat must be refaced.

****

9.Lap:
- Valve face
- Valve seat

NOTE:
After refacing the valve seat or replacing the valve and valve guide, the valve seat and valve face should be lapped.

****

Lapping steps:
- Apply a coarse lapping compound to the valve face.

CAUTION:
Do not let the compound enter the gap between the valve stem and the guide.

- Apply molybdenum disulfide oil to the valve stem.

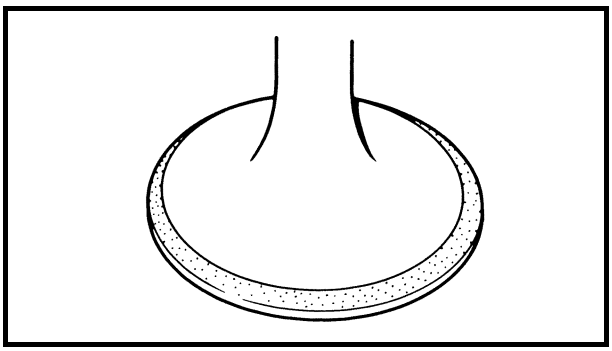

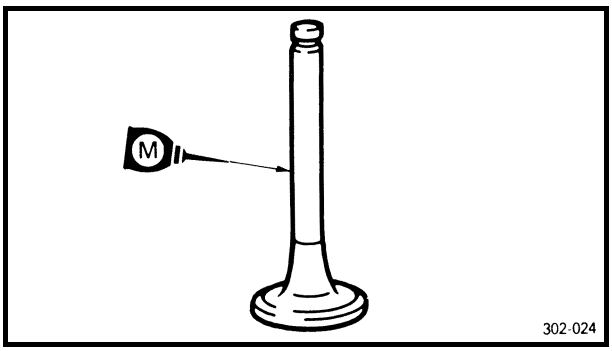

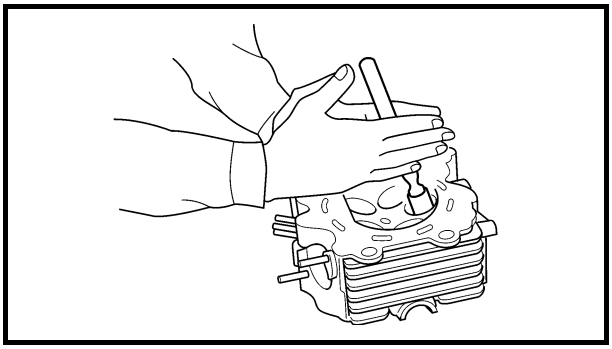

- Install the valve into the cylinder head.
- Turn the valve until the valve face and valve seat are evenly polished, then clean off all of the compound.

NOTE:
For best lapping results, lightly tap the valve seat while rotating the valve back and forth between your hands.

- Apply a fine lapping compound to the valve face and repeat the above steps.

NOTE:
After every lapping operation be sure to clean off all of the compound from the valve face and valve seat.

- Apply Mechanic's blueing dye (Dykem) to the valve face.
- Install the valve into the cylinder head.
- Press the valve through the valve guide and onto the valve seat to make a clear pattern.
- Measure the valve seat width again. If the valve seat width is out of specification, reface and relap the valve seat.

****

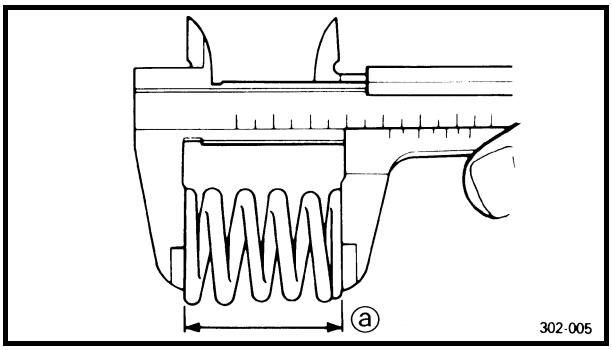

10.Measure:
- Valve spring free length ⓐ
  Out of specification → Replace.

Free length (valve spring):
Inner:
35.95 mm (1.42 in)
<Limit>: 34.15 mm (1.34 in)
Outer:
37.75 mm (1.49 in)
<Limit>: 35.86 mm (1.41 in)

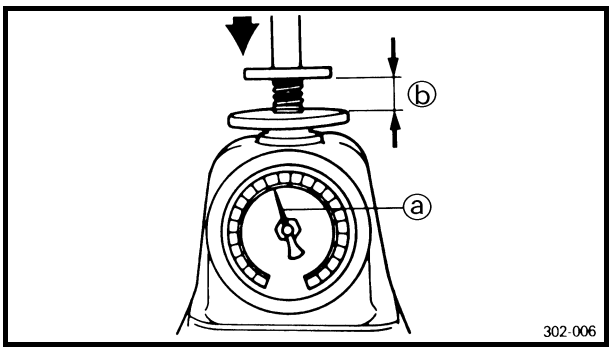

11.Measure:
- Compressed spring force ⓐ
  Out of specification → Replace.

ⓑ Installed length

Compressed spring force:
Inner:
149 ~ 173 N at 27.2 mm
(15.19 ~ 17.64 kg,
33.50 ~ 38.89 lb at 1.07 in)
Outer:
165 ~ 191 N at 30.7 mm
(16.83 ~ 19.49 kg,
37.09 ~ 42.94 lb at 1.21 in)

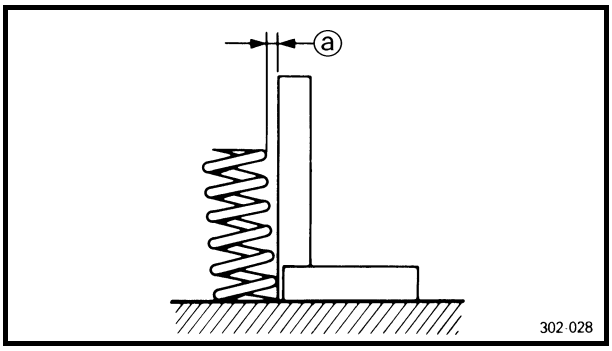

12.Measure:
- Spring tilt ⓐ
  Out of specification → Replace.

Spring tilt limit:
Inner:
2.5°/1.6 mm (0.06 in)
Outer:
2.5°/1.6 mm (0.06 in)

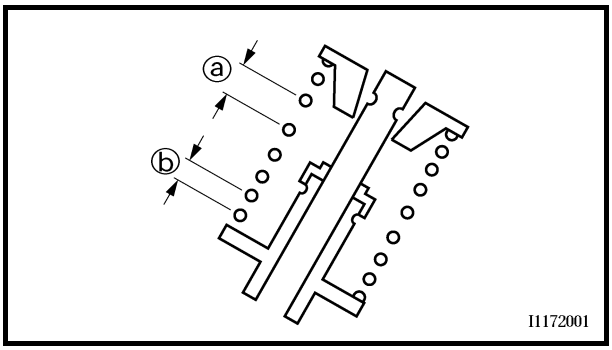

INSTALLING THE VALVE AND VALVE SPRING

1.Apply:
- Molybdenum disulfide oil
  (onto the valve stem and valve stem seal)

2.Install:
- Valve spring seats
- Valve stem seals New
- Valves
- Valve springs
- Valve spring retainers

NOTE:
Install the valve springs with the larger pitch ⓐ facing upwards.

ⓑ Smaller pitch

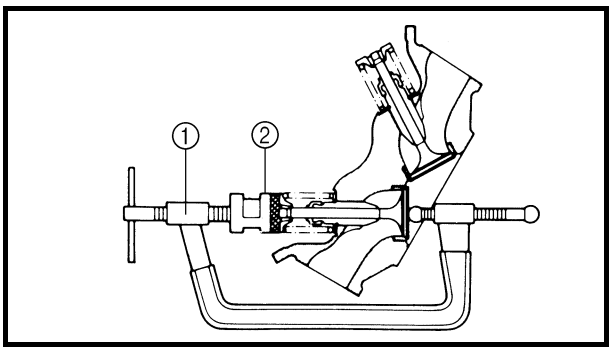

3.Install:
- Valve cotters

NOTE:
Install the valve cotters while compressing the valve spring with the valve spring compressor ① and attachment ②.

Valve spring compressor:
P/N. YM-04019, 90890-04019
Valve spring compressor attachment:
P/N. 90890-01243

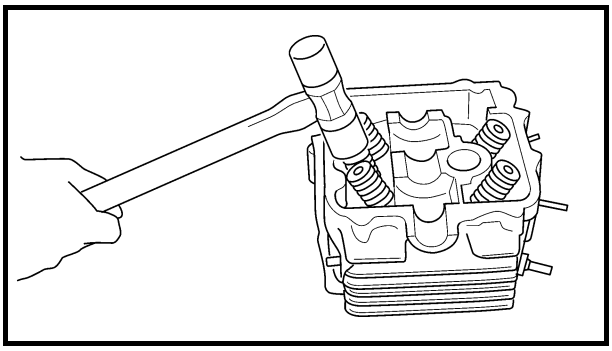

4.To secure the valve cotters onto the valve stem, lightly tap the valve tip with a piece of wood.

CAUTION:
Hitting the valve tip with excessive force could damage the valve.

CYLINDER AND PISTON

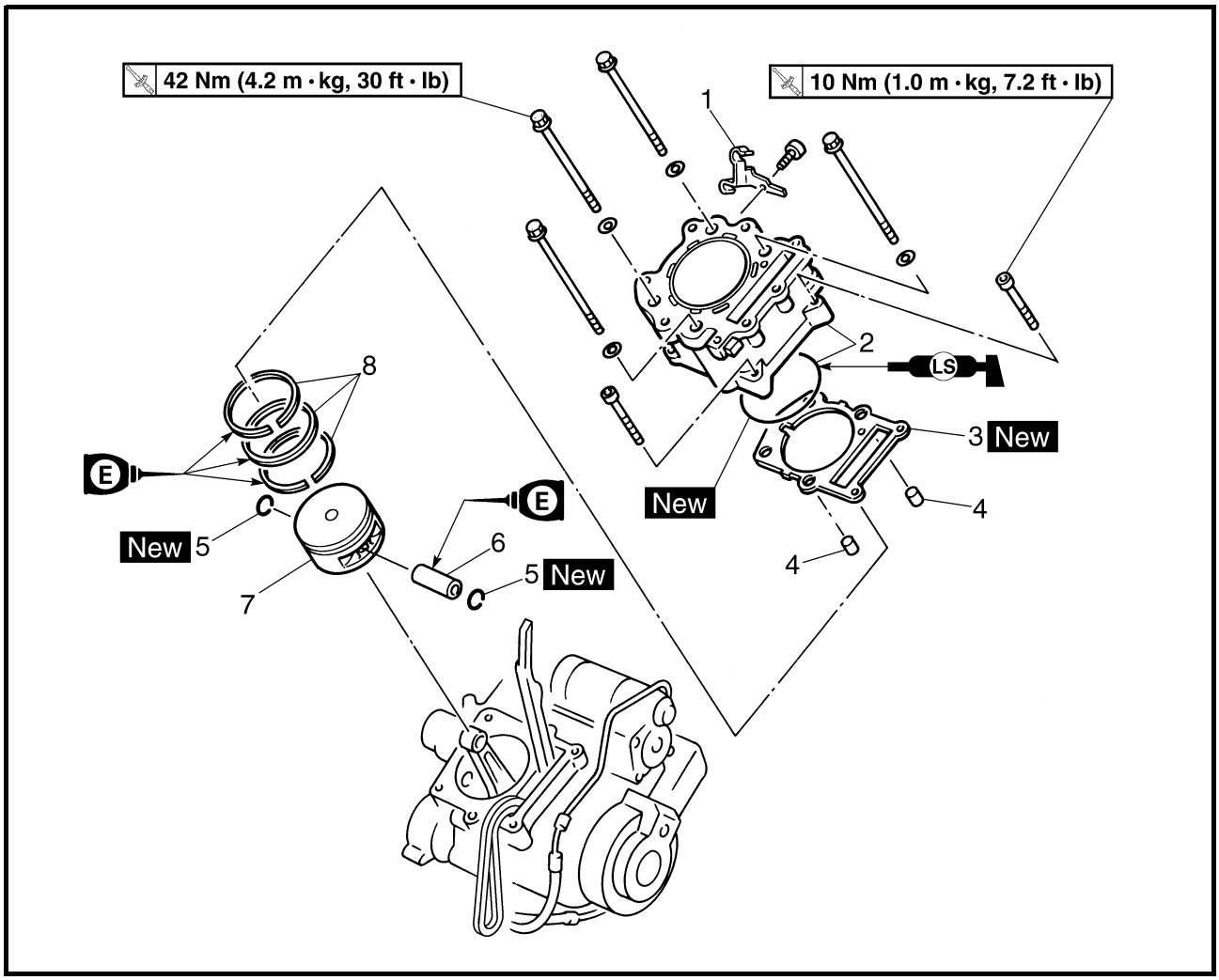

Order	Job name/Part name	Q'ty	Remarks
	Removing the cylinder and piston		Remove the parts in the order below.
	Water jacket inlet housing		Refer to "WATER PUMP" in CHAPTER 6.
	Cylinder head		Refer to "CAMSHAFT AND CYLINDER HEAD".
1	Cable guide	1	
2	Cylinder/O-ring	1/1	Refer to "INSTALLING THE CYLINDER".
3	Cylinder gasket	1	
4	Dowel pin	2	
5	Piston pin clip	2	
6	Piston pin	1	Refer to "REMOVING/INSTALLING THE PISTON".
7	Piston	1	
8	Piston ring set	1	
			For installation, reverse the removal procedure.

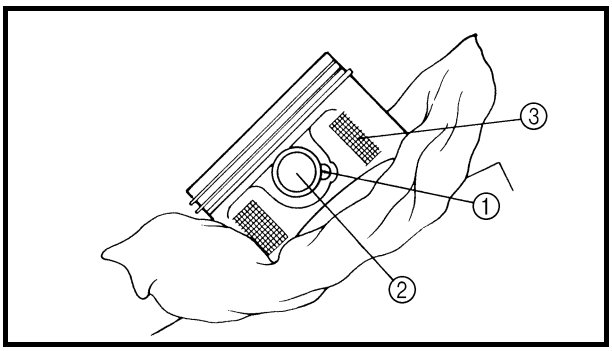

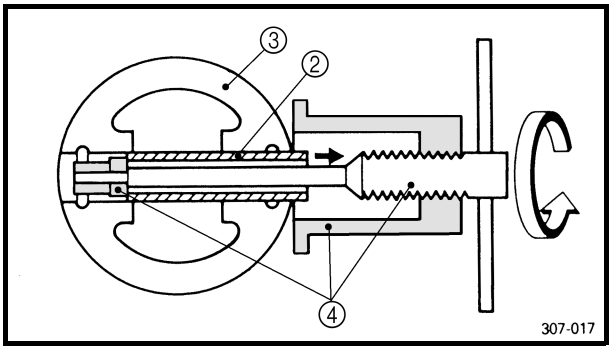

REMOVING THE PISTON

1.Remove:
- Piston pin clips ①
- Piston pin ②
- Piston ③

NOTE:
- Put identification marks on each piston head for reference during reinstallation.
- Before removing each piston pin, deburr the clip groove and pin hole area. If the piston pin groove is deburred and the piston pin is still difficult to remove, use the piston pin puller ④.

	**Piston pin puller:** **P/N. YU-01304, 90890-01304**

CAUTION:

Do not use a hammer to drive the piston pin out.

2.Remove:
- Piston rings

NOTE:

Spread the end gaps apart while at the same time lifting the piston ring over the top of the piston crown, as shown in the illustration.

CHECKING THE CYLINDER AND PISTON

1.Check:
- Cylinder and piston walls
  Vertical scratches → Rebore or replace the cylinder and the piston.

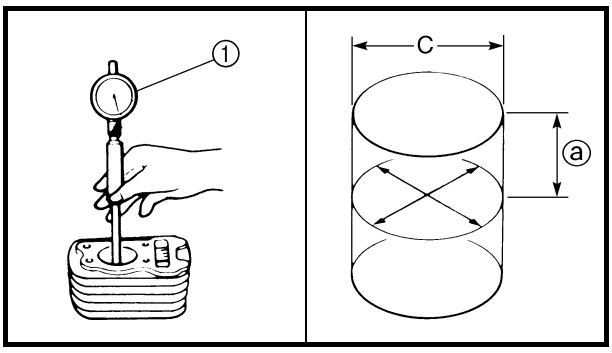

2.Measure:
- Piston-to-cylinder clearance

****

Measurement steps:

1st step:
- Measure the cylinder bore “C” with a cylinder bore gauge ①.

ⓐ 50 mm (2.0 in) from the top of the cylinder

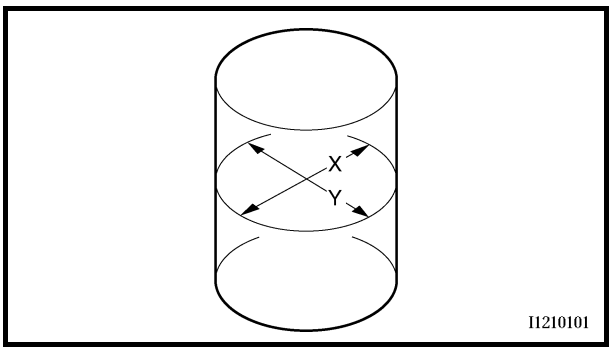

NOTE:
Measure cylinder bore "C" in parallel to and at right angles to the cylinder matching surface. Then, find the average of the measurements.

	Standard	Wear limit
Cylinder bore "C"	100.005 ~ 100.045 mm (3.9372 ~ 3.9388 in)	100.100 mm (3.9404 in)
$C = \frac{X+Y}{2}$		

- If out of specification, rebore or replace the cylinder, and replace the piston and piston rings as a set.

2nd step:

- Measure piston skirt diameter "P" with a micrometer.

ⓑ 5.0 mm (0.20 in) from the piston bottom edge

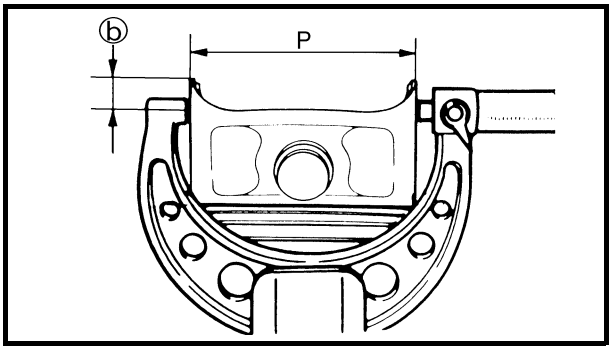

Piston skirt diameter "P":	
Standard	99.945 ~ 99.995 mm (3.9348 ~ 3.9368 in)

- If out of specification, replace the piston and piston rings as a set.

3rd step:

- Find the piston-to-cylinder clearance with the following formula.

Piston-to-cylinder clearance =
Cylinder bore "C" –
Piston skirt diameter "P"

Piston-to-cylinder clearance:
0.05 ~ 0.07 mm
(0.0020 ~ 0.0028 in)
<Limit>: 0.15 mm (0.0059 in)

- If out of specification, rebore or replace the cylinder, and replace the piston and piston rings as a set.

****

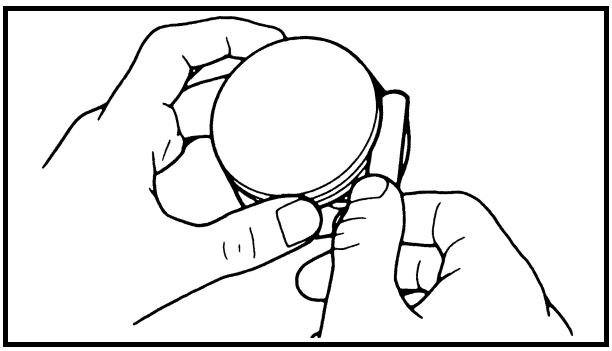

CHECKING THE PISTON RING

1.Measure:

- Ring side clearance
  Use a feeler gauge.
  Out of specification → Replace the piston and rings as a set.

NOTE:
Clean carbon from the piston ring grooves and rings before measuring the side clearance.

	Side clearance	
	Standard	**Limit**
Top ring	**0.04 ~ 0.08 mm (0.0016 ~ 0.0031 in)**	**0.13 mm (0.0051 in)**
2nd ring	**0.03 ~ 0.07 mm (0.0012 ~ 0.0028 in)**	**0.13 mm (0.0051 in)**

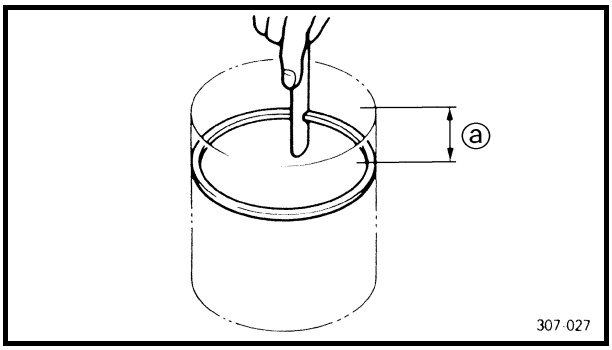

2.Position:

- Piston ring
  (in cylinder)

NOTE:
Insert a ring into the cylinder and push it approximately 50 mm (2.0 in) into the cylinder. Push the ring with the piston crown so that the ring will be at a right angle to the cylinder bore.

ⓐ 50 mm (2.0 in)

3.Measure:

- Ring end gap
  Out of specification → Replace.

NOTE:
You cannot measure the end gap on the expander spacer of the oil control ring. If the oil control ring rails show excessive gap, replace all three rings.

	End gap	
	Standard	**Limit**
Top ring	**0.30 ~ 0.45 mm (0.0118 ~ 0.0177 in)**	**0.70 mm (0.0276 in)**
2nd ring	**0.30 ~ 0.45 mm (0.0118 ~ 0.0177 in)**	**0.80 mm (0.0315 in)**
Oil ring	**0.2 ~ 0.7 mm (0.0079 ~ 0.0276 in)**	**—**

CHECKING THE PISTON PIN INSPECTION

1.Check:
- Piston pin
  Blue discoloration/grooves → Replace, then inspect the lubrication system.

2.Measure:
- Piston pin-to-piston clearance

****

Measurement steps:

- Measure the piston pin outside diameter ⓐ.
  If out of specification, replace the piston pin.

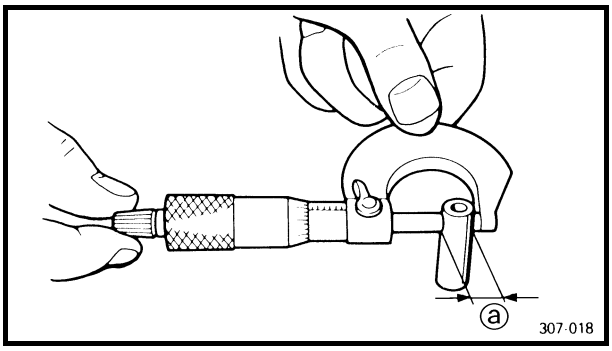

Outside diameter (piston pin):
21.991 ~ 22.000 mm
(0.8658 ~ 0.8661 in)

- Measure the piston inside diameter ⓑ.

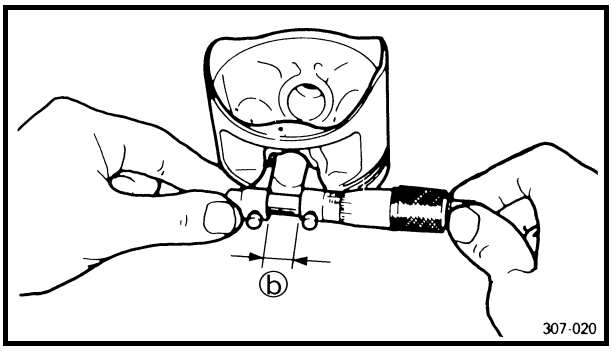

Piston pin bore inside diameter:
22.004 ~ 22.015 mm
(0.8663 ~ 0.8667 in)

- Calculate the piston pin-to-piston clearance with the following formula.

Piston pin-to-piston clearance =
Bore size (piston pin) ⓑ –
Outside diameter (piston pin) ⓐ

- If out of specification, replace the piston.

Piston pin-to-piston clearance:
0.004 ~ 0.024 mm
(0.00016 ~ 0.00094 in)
<Limit>: 0.07 mm (0.003 in)

****

INSTALLING THE PISTON

1.Install:
- Piston rings
  (onto the piston)

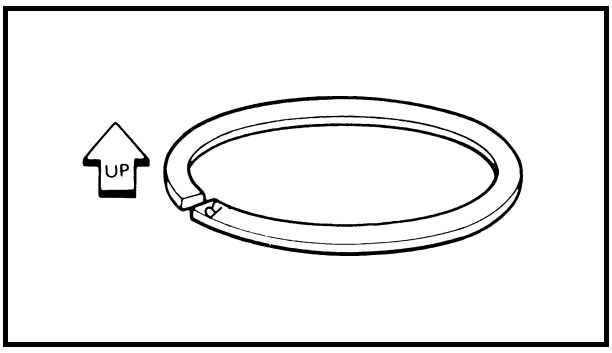

NOTE:
- Be sure to install the piston rings so that the manufacturer's marks or numbers are located on the upper side of the rings.
- Lubricate the piston and piston rings liberally with engine oil.

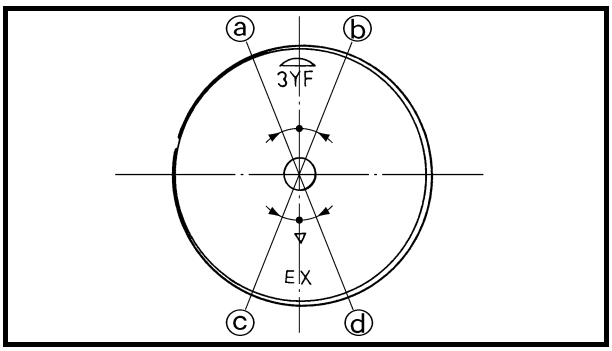

2.Position:
- Top ring
- 2nd ring
- Oil ring

Offset the piston ring end gaps as shown.

ⓐ Top ring end
ⓑ Oil ring end (lower)
ⓒ Oil ring end (upper)
ⓓ 2nd ring end

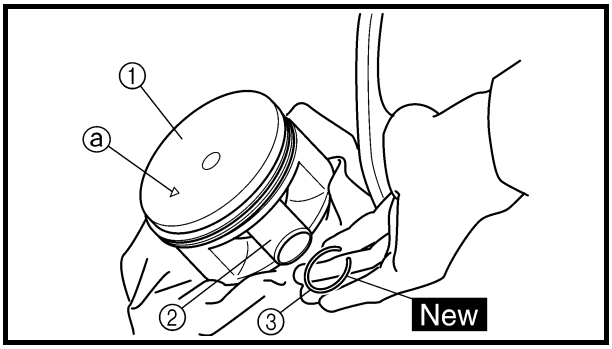

3.Install:
- Piston ①
- Piston pin ②
- Piston pin clips ③ New

NOTE:
- Apply engine oil onto the piston pin, piston ring and piston.
- Be sure that the arrow mark ⓐ on the piston points to the exhaust side of the engine.
- Before installing the piston pin clip, cover the crankcase with a clean rag to prevent the piston pin clip from falling into the crankcase.

4.Lubricate:
- Piston
- Piston rings
- Cylinder

NOTE:
Apply a liberal coating of engine oil.

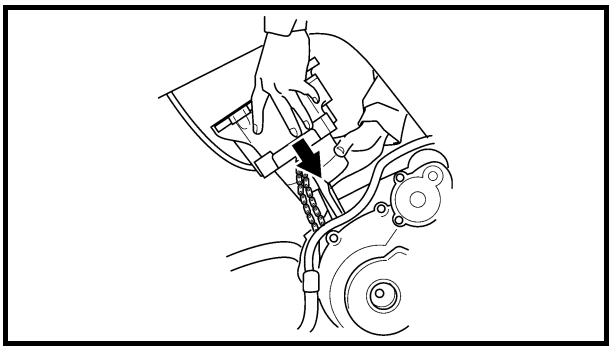

INSTALLING THE CYLINDER

1.Install:
- Cylinder
- O-ring New
- Bolts (M10) — **42 Nm (4.2 m · kg, 30 ft · lb)**
- Bolts (M6) — **10 Nm (1.0 m · kg, 7.2 ft · lb)**

NOTE:
Install the cylinder with one hand while compressing the piston rings with the other hand.

CAUTION:
- **Be careful not to damage the timing chain damper during installation.**
- **Pass the timing chain through the timing chain cavity.**

AC MAGNETO

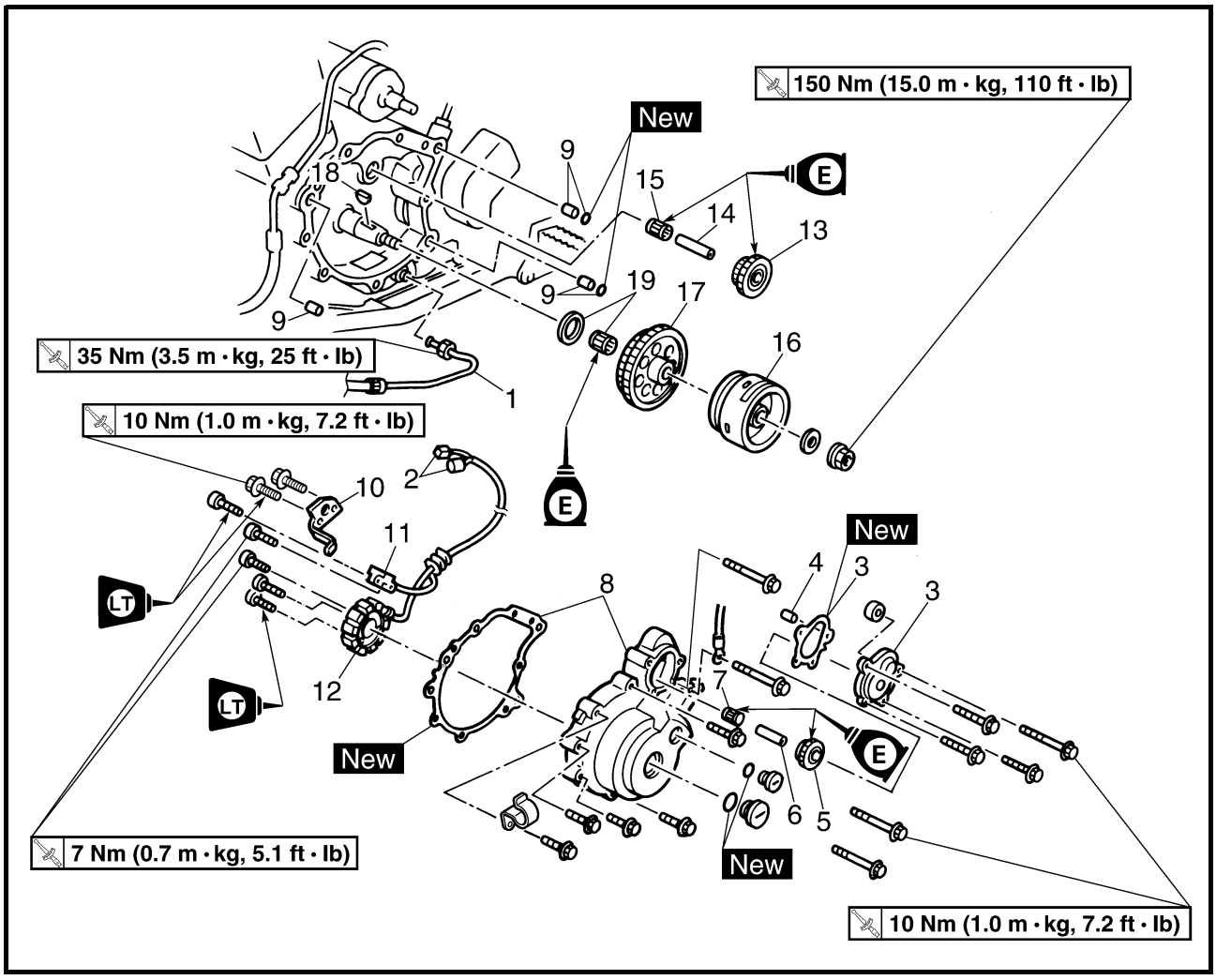

Order	Job name/Part name	Q'ty	Remarks
	Removing the AC magneto		Remove the parts in the order below.
	Engine oil		Drain.
	Shift pedal link		Disconnect.
1	Oil pipe 1	1	Disconnect.
2	AC magneto coupler	2	
3	Starter idle gear cover/gasket	1/1	
4	Dowel pin	1	
5	Starter idle gear 1	1	
6	Starter idle gear 1 shaft	1	
7	Bearing	1	
8	AC magneto cover/gasket	1/1	Refer to "REMOVING/INSTALLING THE AC MAGNETO ROTOR".

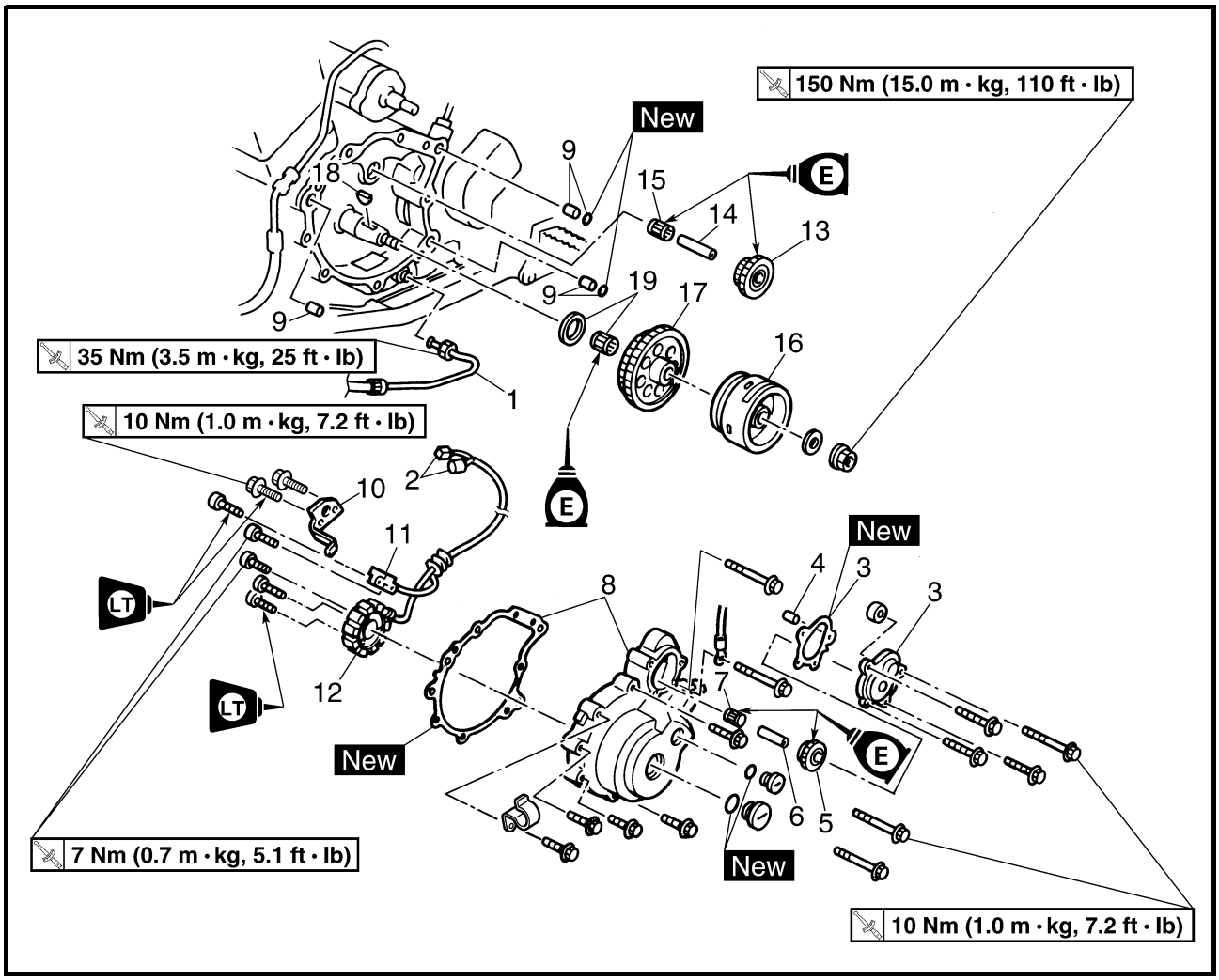

Order	Job name/Part name	Q'ty	Remarks
9	Dowel pin/O-ring	3/2	
10	Lead holder	1	
11	Pickup coil	1	
12	Stator assembly	1	
13	Starter idle gear 2	1	
14	Starter idle gear 2 shaft	1	
15	Bearing	1	
16	AC magneto rotor	1	Refer to "REMOVING/INSTALLING THE AC MAGNETO ROTOR".
17	Starter wheel gear	1	
18	Woodruff key	1	
19	Bearing/washer	1/1	
			For installation, reverse the removal procedure.

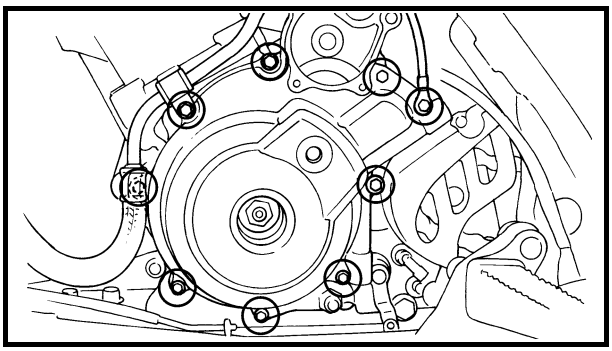

REMOVING THE AC MAGNETO ROTOR

1.Remove:
- AC magneto cover

NOTE:
Loosen each bolt 1/4 of a turn at a time, in stages and in a crisscross pattern. After all of the bolts are fully loosened, remove them.

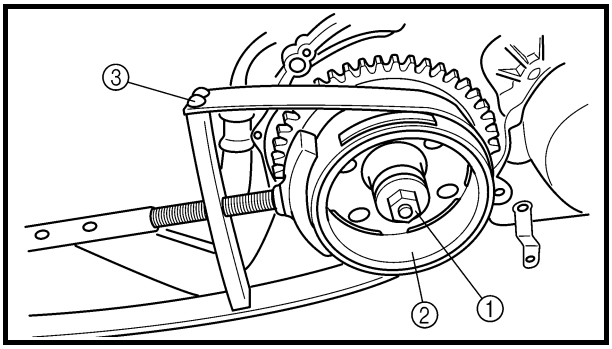

2.Remove:
- AC magneto rotor nut ①
- Washer

NOTE:
- While holding the AC magneto rotor ② with the sheave holder ③, loosen the generator rotor nut.
- Do not allow the sheave holder to touch the projection ④ on the rotor.

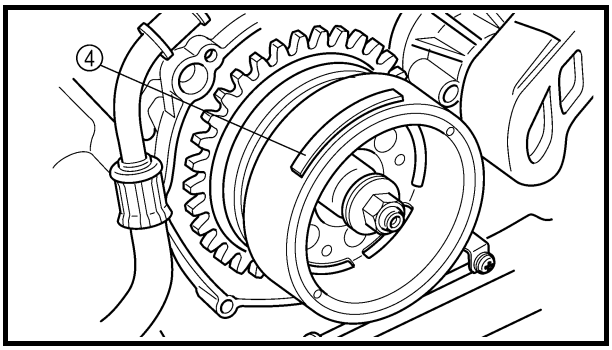

Sheave holder:
P/N. YS-01880, 90890-01701

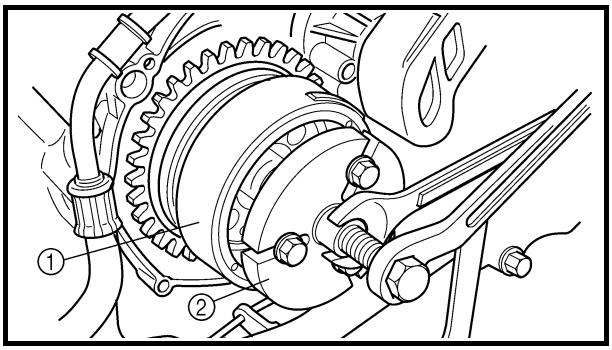

3.Remove:
- AC magneto rotor ①

NOTE:
Use the flywheel puller ②.

Flywheel puller:
P/N. YU-33270, 90890-01362

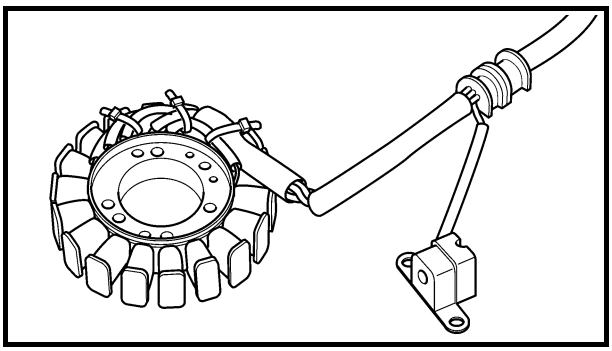

CHECKING THE COIL

1.Check:
- Stator assembly
- Pickup coil
  Damage → Replace.

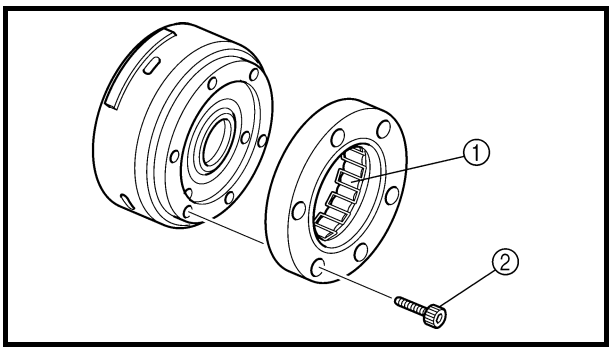

CHECKING THE STARTER CLUTCH

1.Check:
- Starter one-way clutch ①
  Cracks/damage → Replace.
- Bolts ② (starter clutch)
  Loose → Replace.

NOTE:
The arrow mark on the starter clutch must face inward, away from the AC magneto rotor.

Bolts (starter clutch):
16 Nm (1.6 m • kg, 11 ft • lb)
LOCTITE®

****

Checking steps:
- Install the starter wheel gear to the starter clutch, and hold the starter clutch.
- When turning the starter wheel gear counter clockwise A, the starter clutch and the wheel gear should be engaged.
  If not, the starter clutch is faulty. Replace it.
- When turning the starter wheel gear clockwise B, the starter wheel gear should turn freely.
  If not, the starter clutch is faulty. Replace it.

****

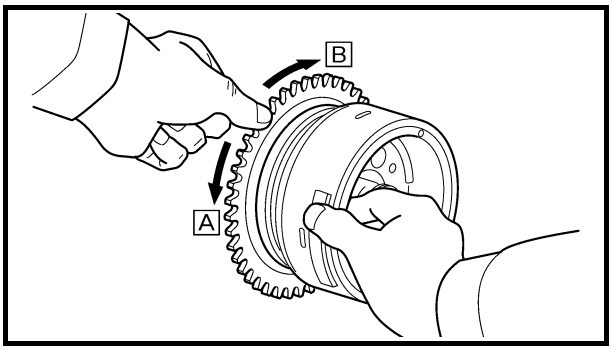

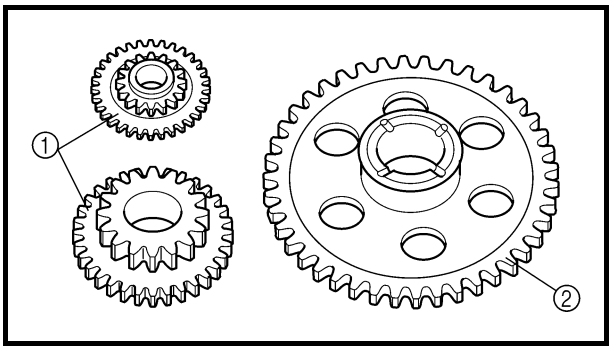

2.Check:
- Gear teeth (starter idle) ①
- Gear teeth (starter wheel) ②
  Burrs/chips/roughness/wear → Replace.

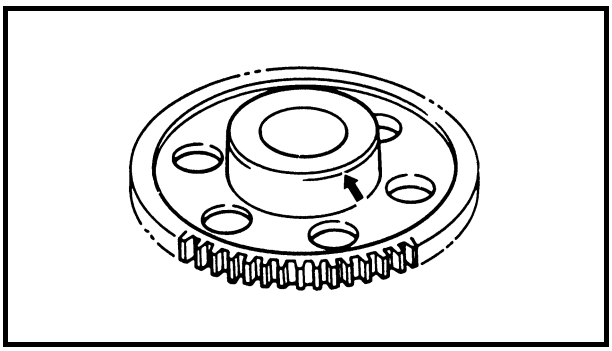

3.Check:
- Starter wheel gear
  (contacting surface)
  Damage/pitting/wear → Replace.

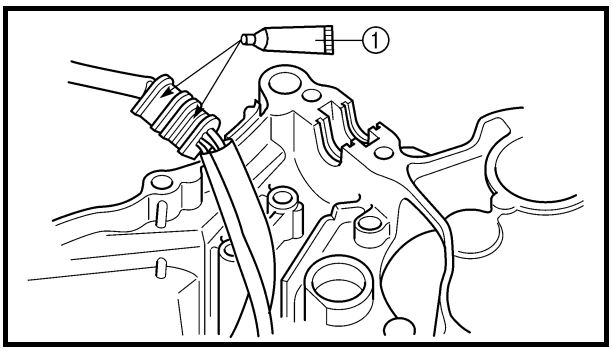

INSTALLING THE AC MAGNETO ROTOR

1.Apply:
- Sealant (Quick Gasket®) ①
  (into the slit)

	Sealant (Quick Gasket®): **P/N. ACC-11001-05-01** **Yamaha bond No. 1215®:** **P/N. 90890-85505**

2.Install:
- Woodruff key
- AC magneto rotor

NOTE:
- Before installing the rotor, clean the outside of the crankshaft and the inside of the rotor.
- After installing the rotor, check that the rotor rotates smoothly. If not, reinstall the key and rotor.

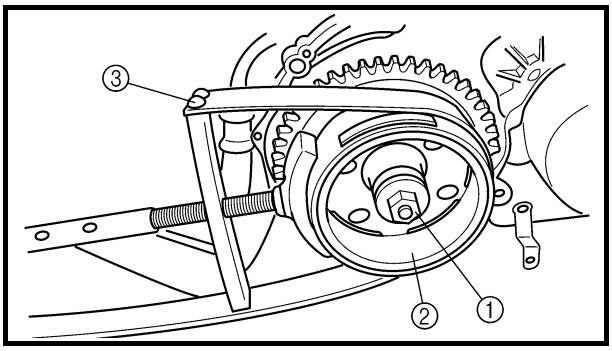

3.Tighten:
- AC magneto rotor nut ①

	150 Nm (15.0 m • kg, 110 ft • lb)

NOTE:
- While holding the AC magneto rotor ② with the sheave holder ③, tighten the generator rotor nut.
- Do not allow the sheave holder to touch the projection ④ on the rotor.

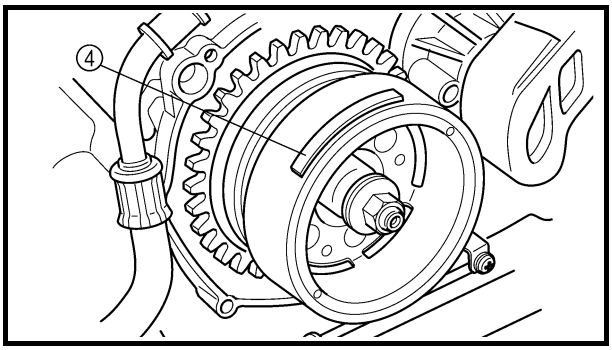

	Sheave holder: **P/N. YS-01880, 90890-01701**

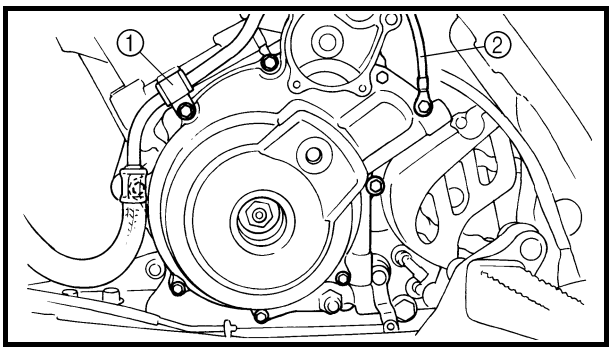

4.Install:
- AC magneto cover
- Oil pipe holder ①
- Ground lead ②
- Bolts **10 Nm (1.0 m • kg, 7.2 ft • lb)**

NOTE:
Tighten the AC magneto cover bolts in stages, using a crisscross pattern.

CLUTCH

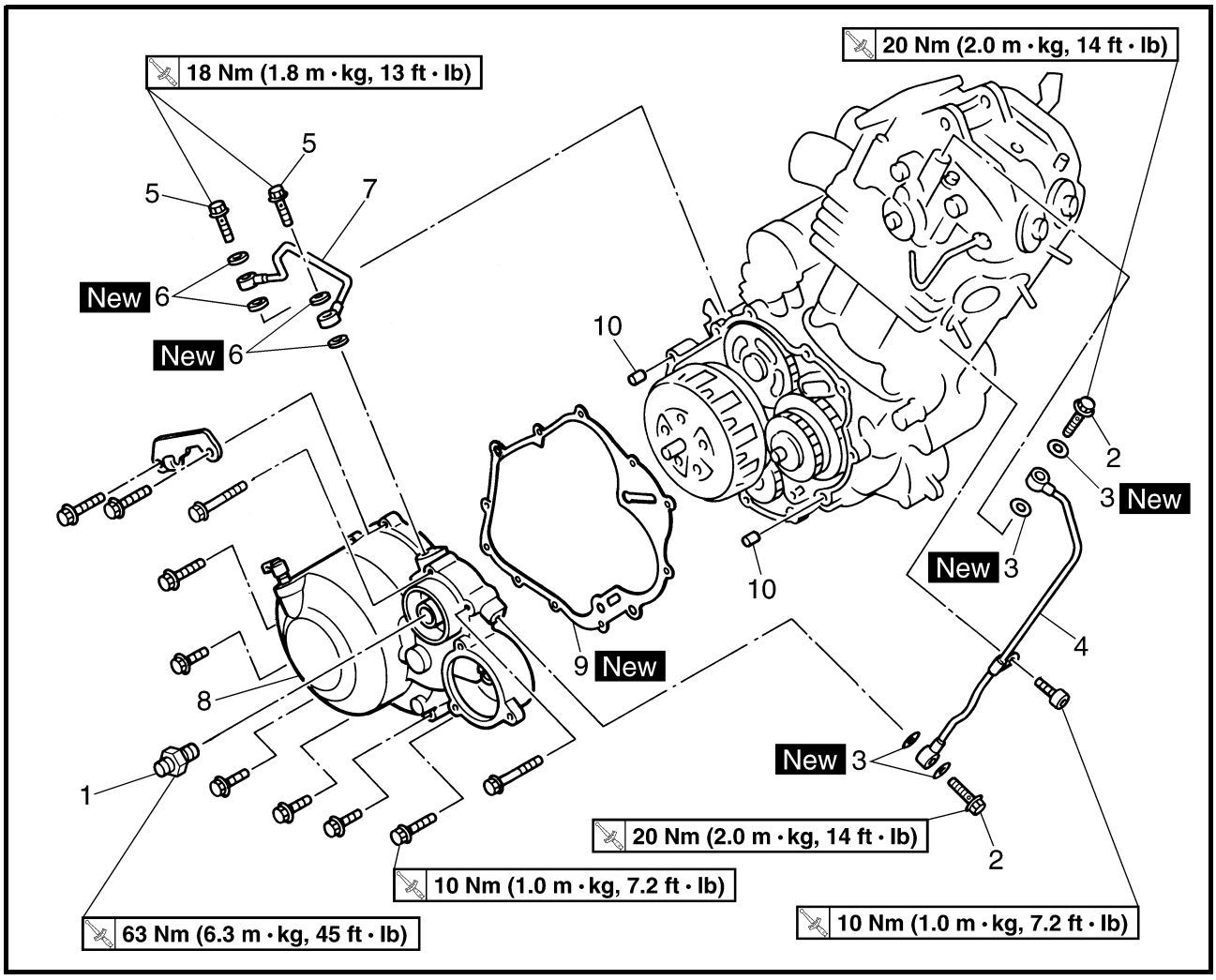

Order	Job name/Part name	Q'ty	Remarks
	Removing the clutch cover		Remove the parts in the order below.
	Engine assembly		Refer to "ENGINE REMOVAL".
1	Oil filter bolt	1	
2	Union bolt	2	
3	Copper washer	4	
4	Oil delivery pipe 1	1	
5	Union bolt	2	
6	Copper washer	4	
7	Oil delivery pipe 2	1	
8	Clutch cover	1	Refer to "REMOVING/INSTALLING THE CLUTCH".
9	Clutch cover gasket	1	
10	Dowel pin	2	
			For installation, reverse the removal procedure.

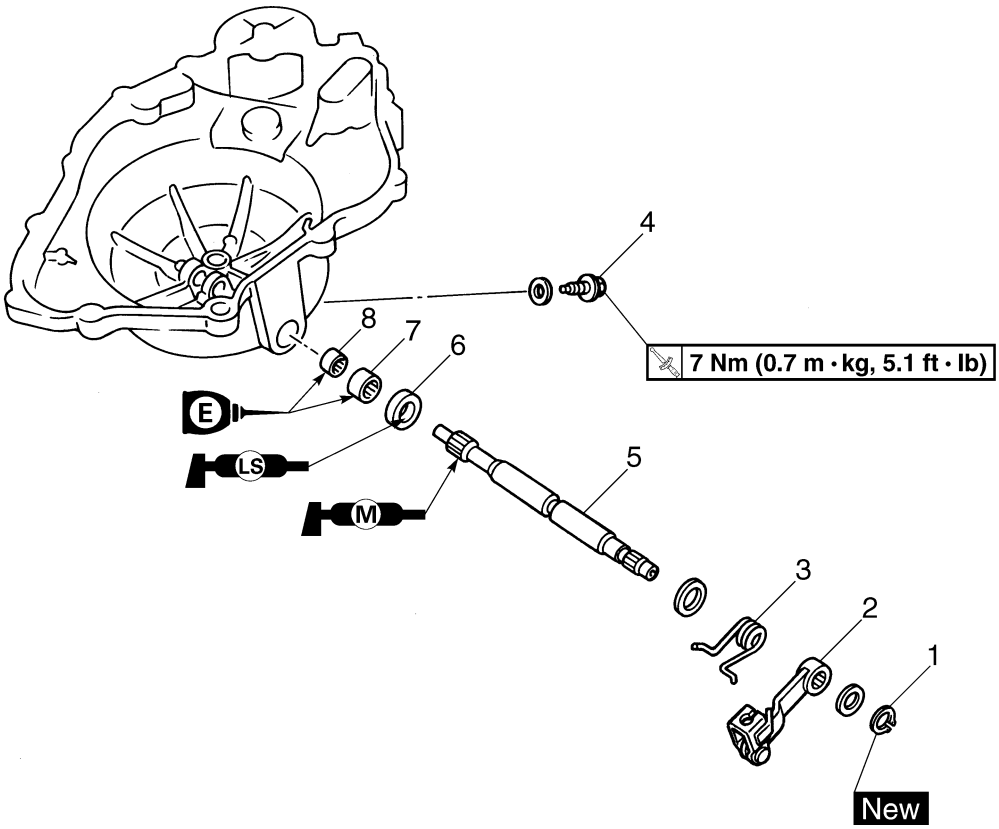

Order	Job name/Part name	Q'ty	Remarks
	Removing the pull lever shaft		Remove the parts in the order below.
1	Circlip	1	
2	Pull lever	1	
3	Pull lever spring	1	
4	Bolt	1	
5	Pull lever shaft	1	
6	Oil seal	1	
7	Bearing	1	
8	Bearing	1	
			For installation, reverse the removal procedure.

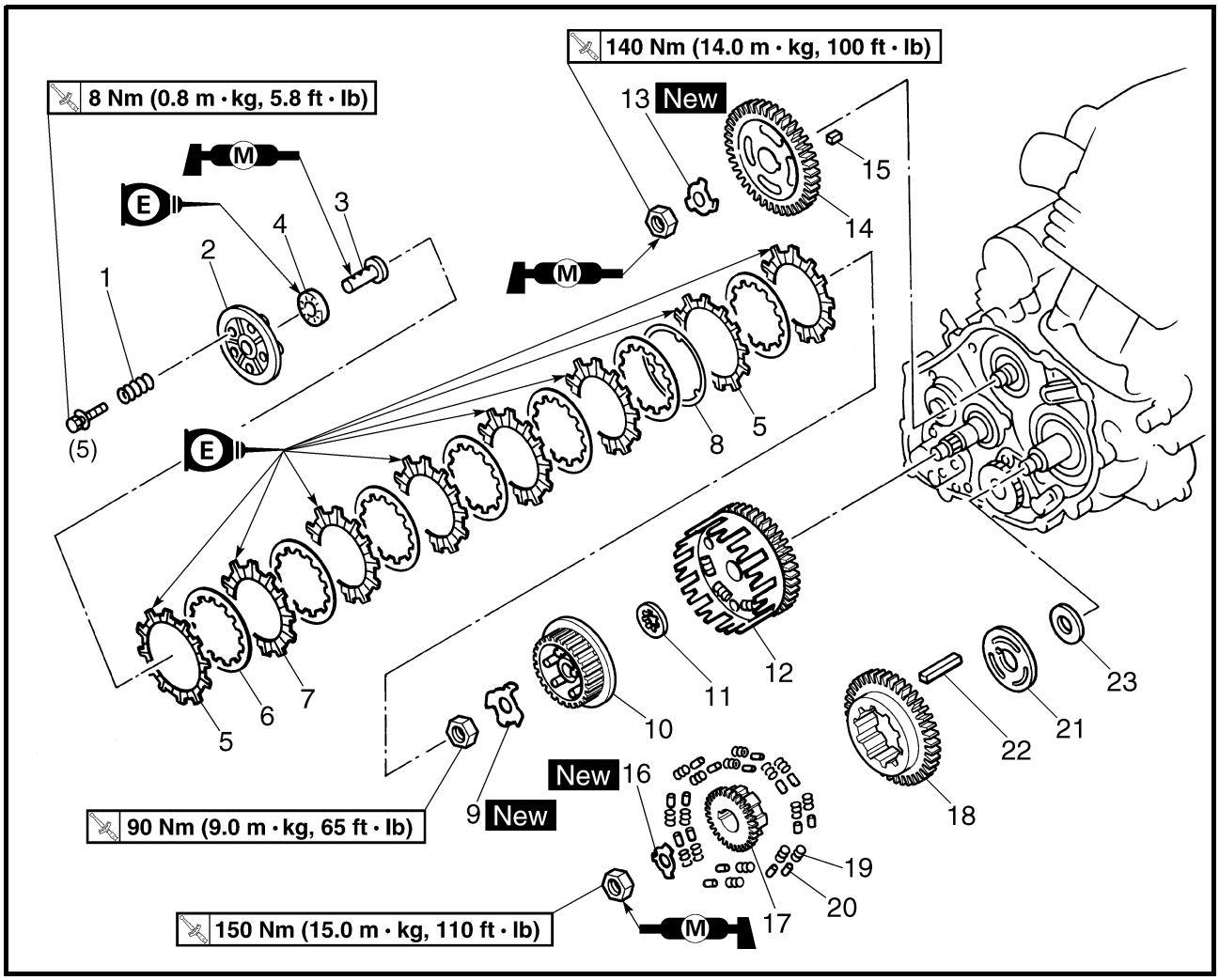

Order	Job name/Part name	Q'ty	Remarks
	Removing the clutch		Remove the parts in the order below.
1	Clutch spring	5	Refer to "INSTALLING THE CLUTCH".
2	Pressure plate	1	
3	Pull rod	1	
4	Bearing	1	
5	Friction plate 2	2	Inside diameter = 116 mm (4.57 in)
6	Clutch plate	7	
7	Friction plate 1	6	Inside diameter = 112 mm (4.41 in)
8	Cushion spring	1	
9	Lock washer	1	Refer to "REMOVING/INSTALLING THE CLUTCH".
10	Clutch boss	1	

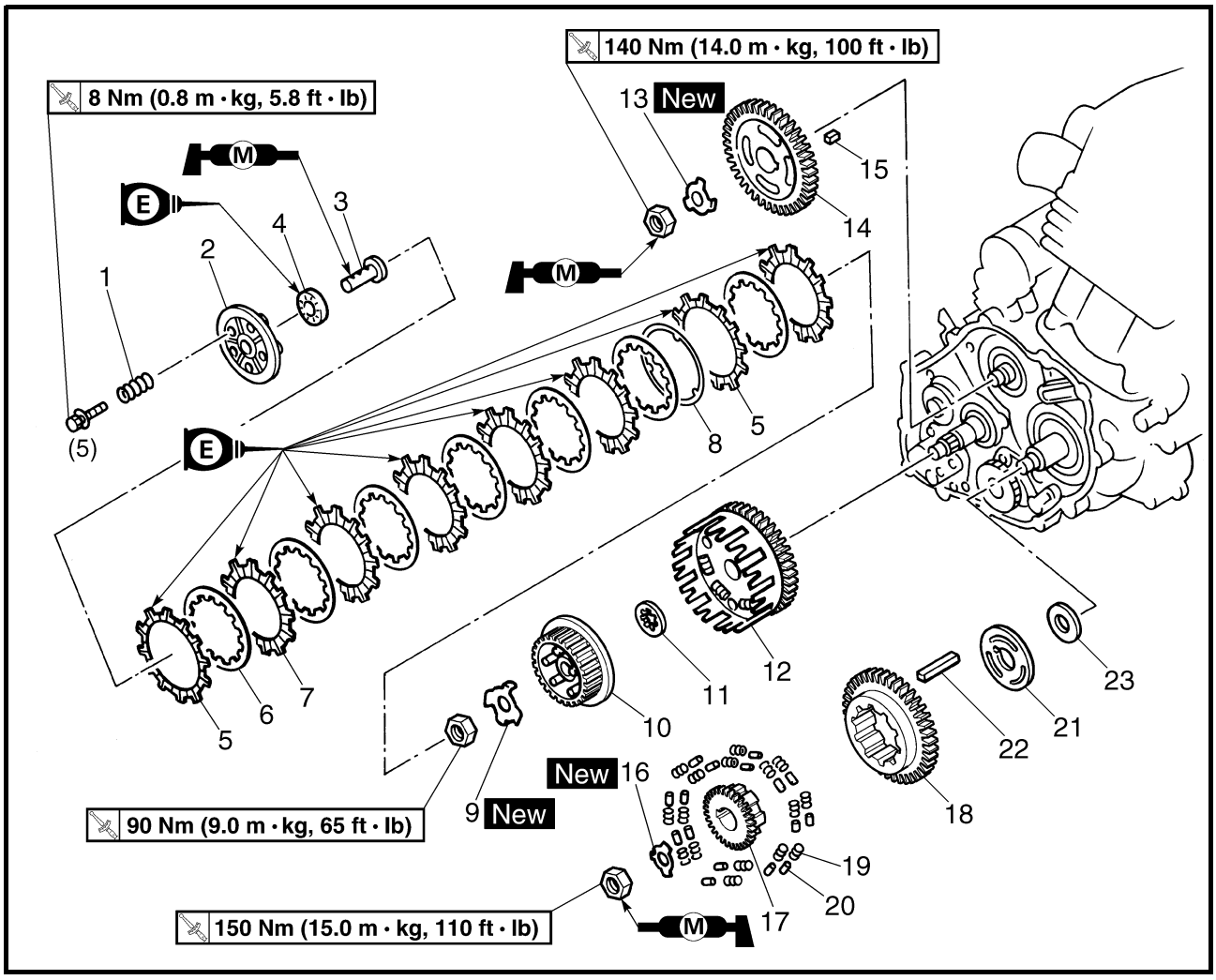

Order	Job name/Part name	Q'ty	Remarks
11	Thrust washer	1	
12	Clutch housing	1	Refer to "INSTALLING THE CLUTCH".
13	Lock washer	1	
14	Balancer driven gear	1	
15	Straight key	1	
16	Lock washer	1	Refer to "REMOVING/INSTALLING THE PRIMARY DRIVE GEAR AND BALANCER DRIVEN GEAR".
17	Primary drive gear	1	
18	Balancer drive gear	1	
19	Spring	16	
20	Dowel pin	16	
21	Plate	1	
22	Straight key	1	
23	Washer	1	
			For installation, reverse the removal procedure.

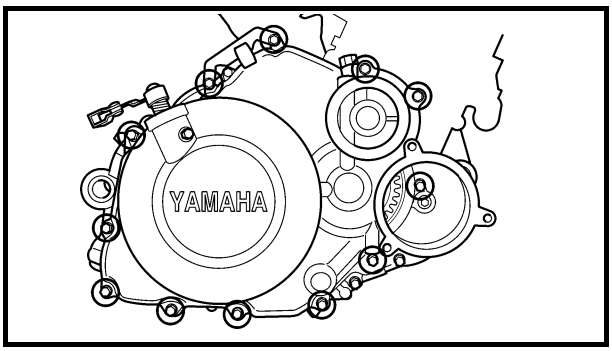

REMOVING THE CLUTCH

1.Remove:
- Clutch cover

NOTE:
Loosen each bolt 1/4 of a turn at a time, in stages and in a crisscross pattern. After all of the bolts are fully loosened, remove them.

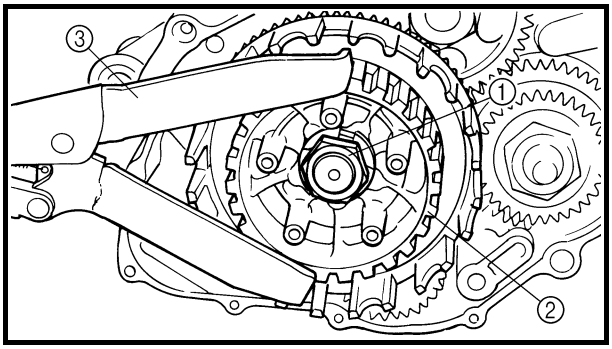

2.Straighten the lock washer tab.
3.Loosen:
- Clutch boss nut ①

NOTE:
While holding the clutch boss ② with the clutch holding tool ③, loosen the clutch boss nut.

Clutch holding tool:
P/N. YM-91042, 90890-04086

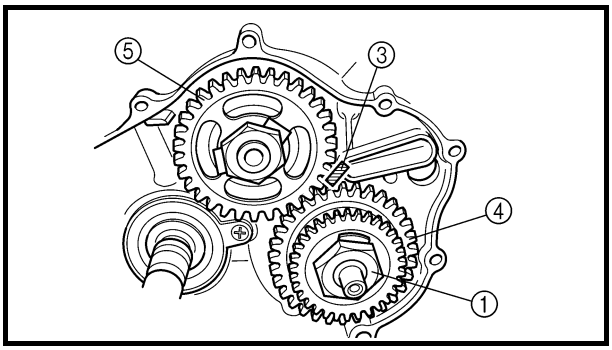

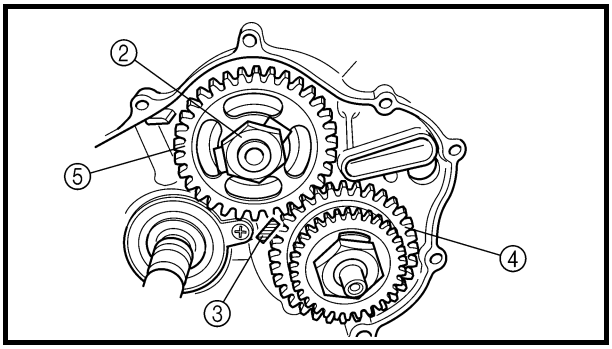

REMOVING THE PRIMARY DRIVE GEAR AND BALANCER DRIVEN GEAR

1.Straighten the lock washer tabs.
2.Loosen:
- Primary drive gear nut ①
- Balancer driven gear nut ②

NOTE:
Place an aluminum plate ③ between the teeth of the balancer drive gear ④ and balancer driven gear ⑤.

CHECKING THE FRICTION PLATE

The following procedure applies to all of the friction plates.

1.Check:

- Friction plate
  Damage/wear → Replace the friction plates as a set.

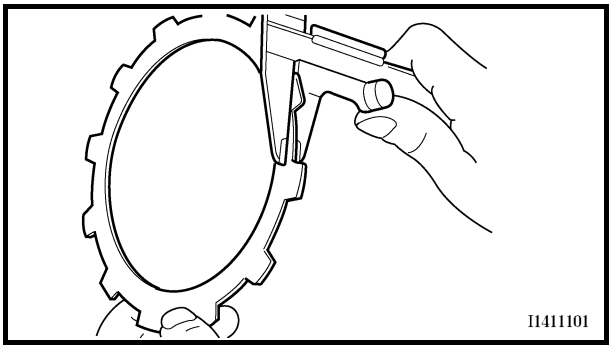

2.Measure:

- Friction plate thickness
  Out of specification → Replace the friction plates as a set.

NOTE:
Measure the friction plate at four places.

Friction plate 1 thickness:
2.74 ~ 2.86 mm (0.108 ~ 0.113 in)
<Limit>: 2.6 mm (0.102 in)
Friction plate 2 thickness:
2.94 ~ 3.06 mm (0.116 ~ 0.120 in)
<Limit>: 2.8 mm (0.110 in)

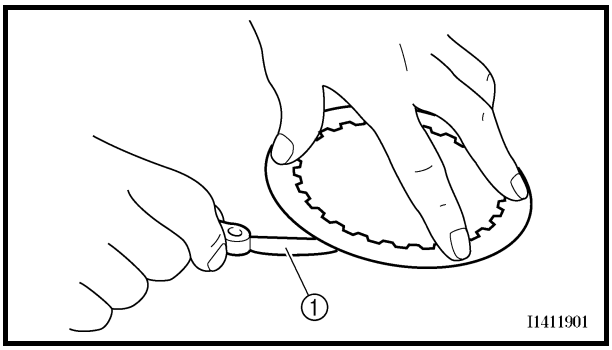

CHECKING THE CLUTCH PLATE

The following procedure applies to all of the clutch plates.

1.Check:

- Clutch plate
  Damage → Replace the clutch plates as a set.

2.Measure:

- Clutch plate warpage
  (with a surface plate and thickness gauge ①)
  Out of specification → Replace the clutch plates as a set.

Maximum clutch plate warpage:
0.2 mm (0.008 in)

CHECKING THE CLUTCH SPRING

The following procedure applies to all of the clutch springs.

1.Check:

- Clutch spring
  Damage → Replace the clutch springs as a set.

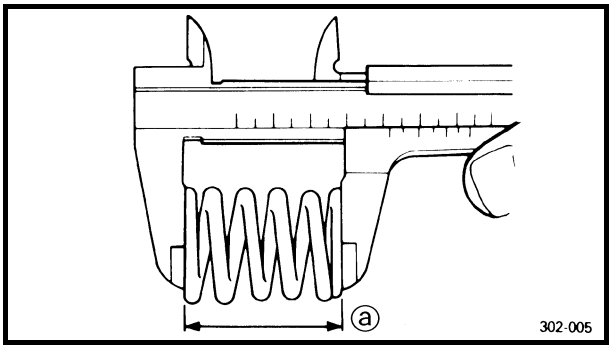

2.Measure:

- Clutch spring free length ⓐ
  Out of specification → Replace the clutch springs as a set.

Clutch spring free length:
42.8 mm (1.69 in)
<Limit>: 40.7 mm (1.60 in)

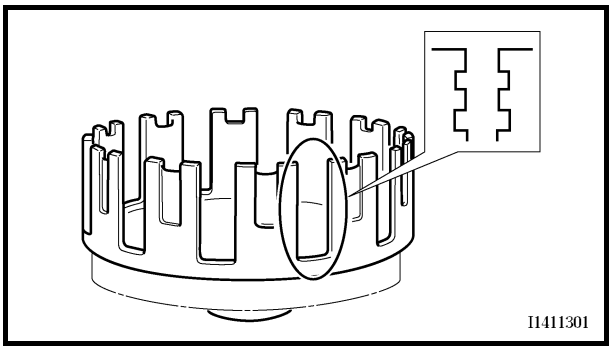

CHECKING THE CLUTCH HOUSING

1.Check:

- Clutch housing dogs
  Damage/pitting/wear → Deburr the clutch housing dogs or replace the clutch housing.

NOTE:
Pitting on the clutch housing dogs will cause erratic clutch operation.

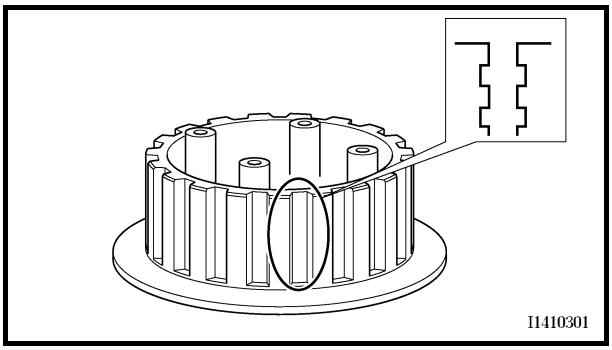

CHECKING THE CLUTCH BOSS

1.Check:

- Clutch boss splines
  Damage/pitting/wear → Replace the clutch boss.

NOTE:
Pitting on the clutch boss splines will cause erratic clutch operation.

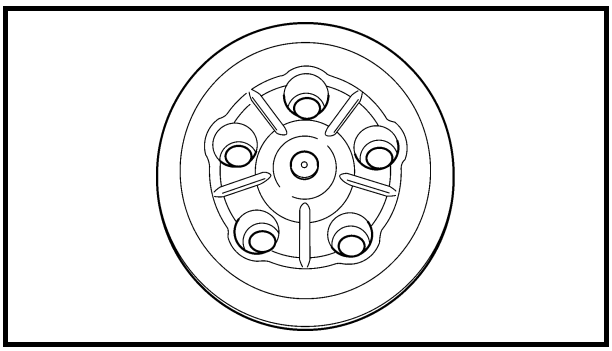

CHECKING THE PRESSURE PLATE

1.Check:

- Pressure plate
  Cracks/damage → Replace.

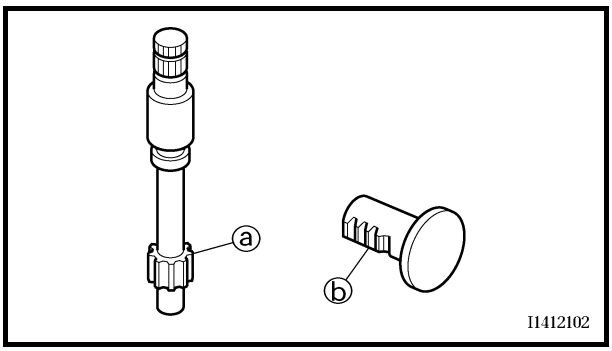

CHECKING THE PULL LEVER SHAFT AND PULL ROD

1.Check:
- Pull lever shaft pinion gear teeth ⓐ
- Pull rod teeth ⓑ
  Damage/wear → Replace the pull lever shaft and pull rod as a set.

2.Check:
- Pull rod bearing
  Damage/wear → Replace.

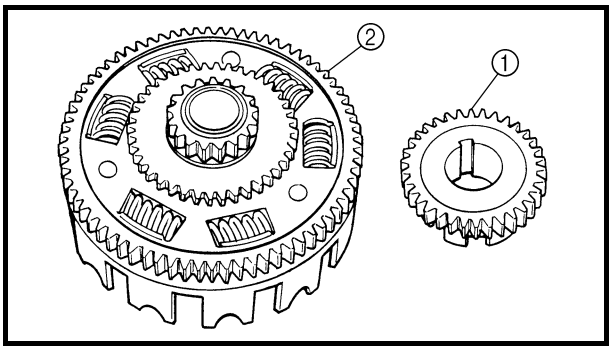

CHECKING THE PRIMARY DRIVE

1.Check:
- Primary drive gear ①
- Primary driven gear ②
  Damage/wear → Replace the primary drive gear and clutch housing as a set.
  Excessive noise during operation → Replace the primary drive gear and clutch housing as a set.

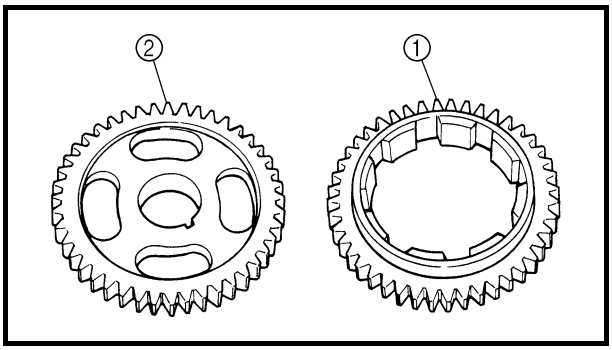

CHECKING THE BALANCER DRIVE

1.Check:
- Balancer drive gear ①
- Balancer driven gear ②
  Damage/wear → Replace the balancer drive gear and balancer driven gear as a set.
  Excessive noise during operation → Replace the balancer drive gear and balancer driven gear as a set.

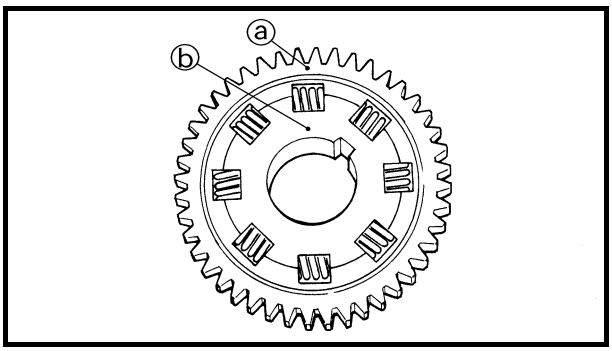

INSTALLING THE PRIMARY DRIVE GEAR AND BALANCER DRIVEN GEAR

1.Install:
- Dowel pin
- Spring
- Balancer drive gear
  (onto the primary drive gear)

NOTE:
Align the punch mark ⓐ on the balancer drive gear with the punch mark ⓑ on the primary drive gear.

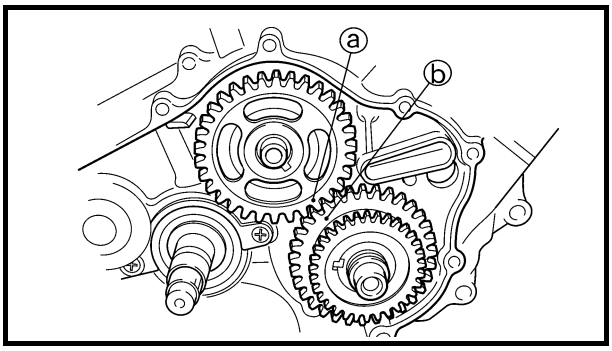

2.Install:
- Primary drive gear
- Balancer driven gear

NOTE:
Align the punch mark ⓐ on the balancer driven gear with the punch mark ⓑ on the primary drive gear.

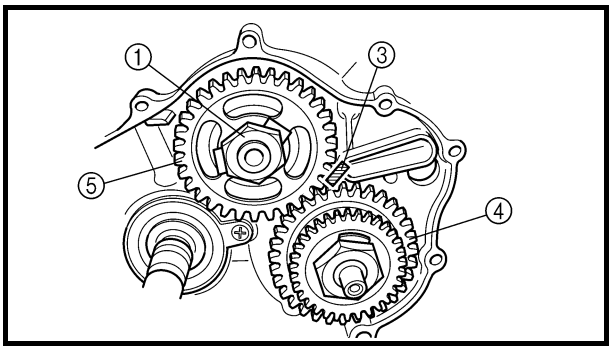

3.Tighten:
- Balancer driven gear nut ①

	140 Nm (14.0 m • kg, 100 ft • lb)

- Primary drive gear nut ②

	150 Nm (15.0 m • kg, 110 ft • lb)

NOTE:
- Place an aluminum plate ③ between the teeth of the balancer drive gear ④ and balancer driven gear ⑤.
- Apply the molybdenum disulfide grease to the thread of axles and nuts.

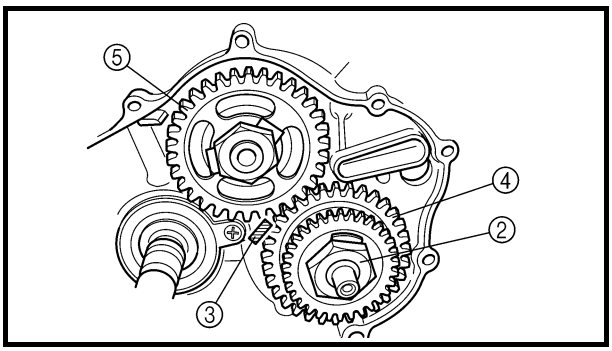

4.Bend the lock washer tabs along the balancer driven gear nut.
5.Bend the lock washer tabs along a flat side of the primary drive gear nut.

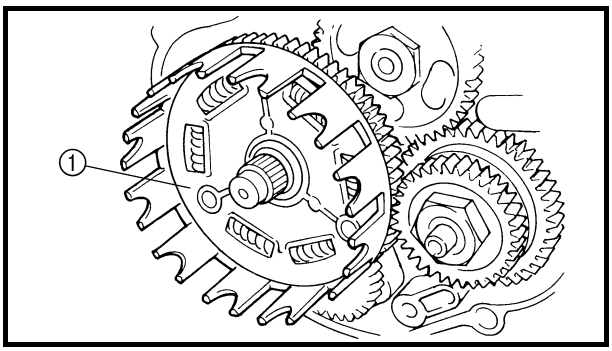

INSTALLING THE CLUTCH

1.Install:
- Clutch housing ①

NOTE:
- Make sure that the primary driven gear teeth and primary drive gear teeth mesh correctly.
- Make sure that the oil pump drive gear teeth and oil pump driven gear teeth mesh correctly.

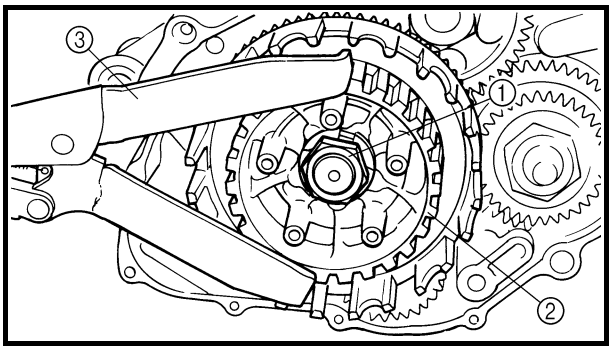

2.Tighten:
- Clutch boss nut ①

90 Nm (9.0 m • kg, 65 ft • lb)

NOTE:
While holding the clutch boss ② with the clutch holding tool ③, tighten the clutch boss nut.

Clutch holding tool:
P/N. YM-91042, 90890-04086

3.Bend the lock washer tab along a flat side of the nut.

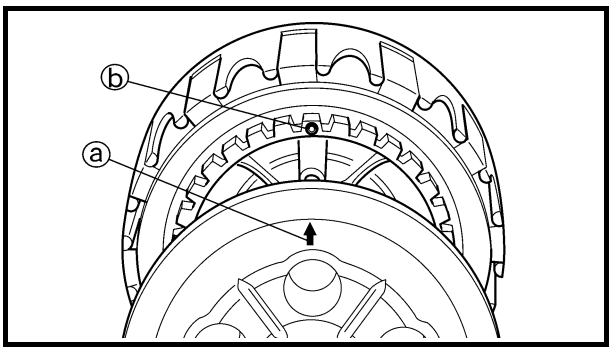

4.Install:
- Pressure plate ①

NOTE:
Align the punch mark ⓐ on the pressure plate with the punch mark ⓑ on the clutch boss.

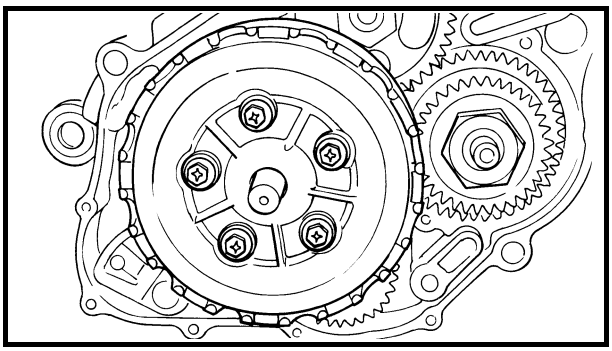

5.Install:
- Clutch spring **8 Nm (0.8 m • kg, 5.8 ft • lb)**

NOTE:
Tighten the bolts in stages, using a crisscross pattern.

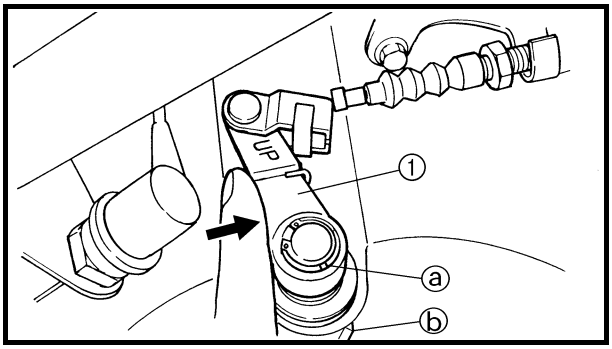

6.Install:
- Clutch cover

NOTE:
Be sure to mesh the pull lever shaft with the pull rod teeth to ensure that the mark ⓐ on pull lever ① is at the closest position to stationary pointer ⓑ onto the clutch cover when the clutch is engaged.

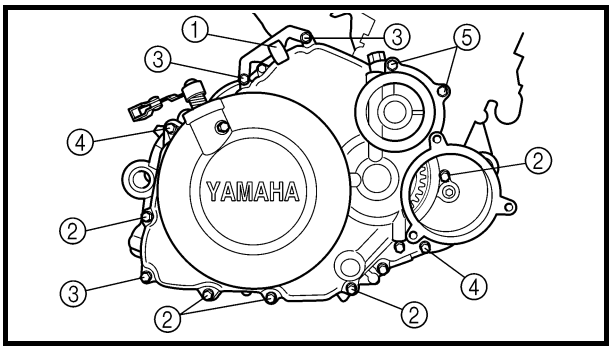

7.Install:
- Clutch cable holder ①
- Bolts **10 Nm (1.0 m • kg, 7.2 ft • lb)**

② Bolt: ℓ = 25 mm
③ Bolt: ℓ = 30 mm
④ Bolt: ℓ = 35 mm
⑤ Bolt: ℓ = 50 mm

NOTE:
Tighten the bolts in stages, using a crisscross pattern.

OIL PUMP

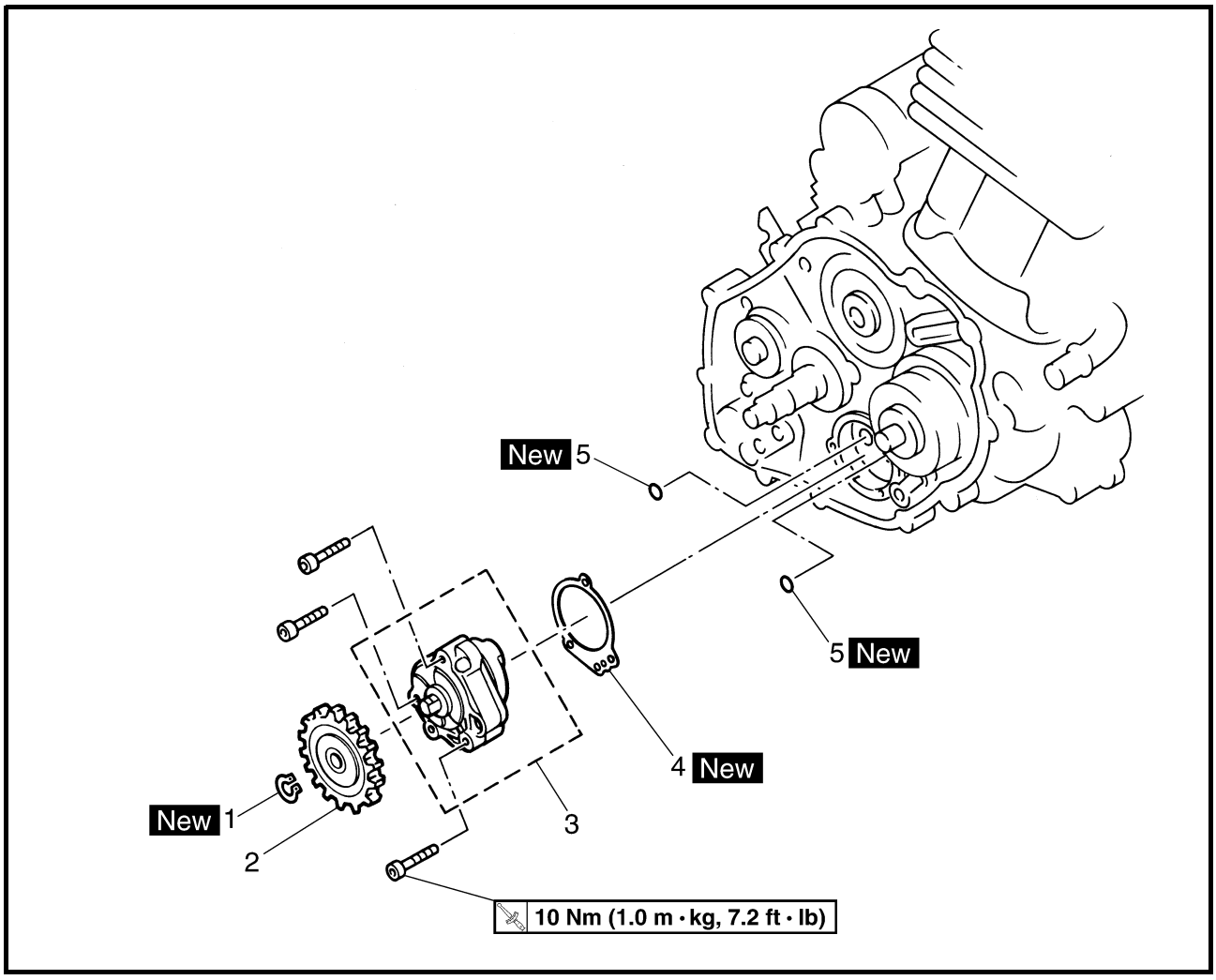

Order	Job name/Part name	Q'ty	Remarks
	Removing the oil pump		Remove the parts in the order below.
	Clutch		Refer to "CLUTCH".
1	Circlip	1	
2	Oil pump driven gear	1	
3	Oil pump	1	
4	Oil pump gasket	1	
5	O-ring	2	
			For installation, reverse the removal procedure.

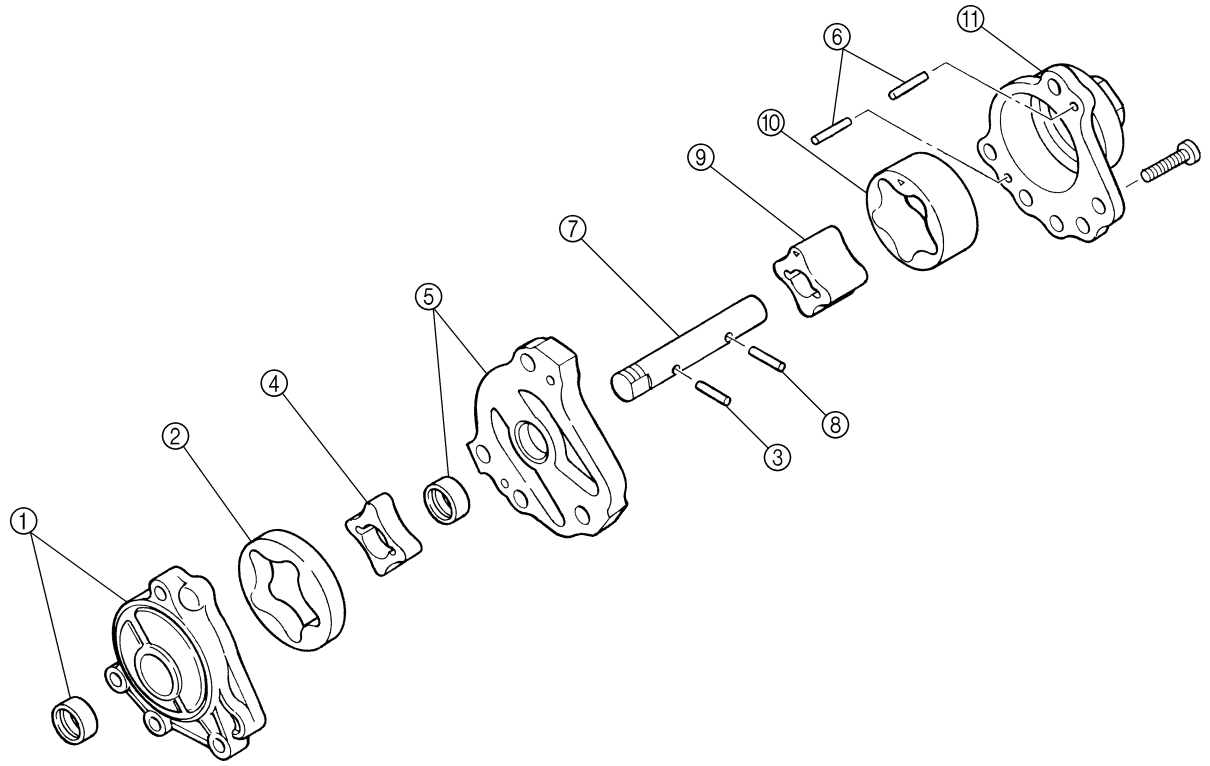

Order	Job name/Part name	Q'ty	Remarks
	Disassembling the oil pump		Remove the parts in the order below.
①	Oil pump housing 1/oil seal	1/1	
②	Oil pump outer rotor 1	1	
③	Dowel pin	1	
④	Oil pump inner rotor 1	1	
⑤	Oil pump housing cover/oil seal	1/1	
⑥	Dowel pin	2	
⑦	Oil pump shaft	1	
⑧	Dowel pin	1	
⑨	Oil pump inner rotor 2	1	Refer to "ASSEMBLING THE OIL PUMP".
⑩	Oil pump outer rotor 2	1	
⑪	Oil pump housing 2	1	
			For assembly, reverse the disassembly procedure.

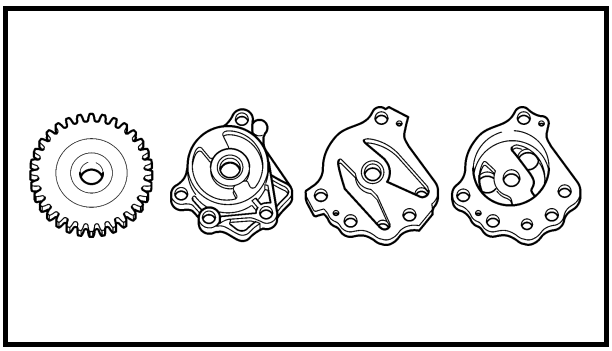

CHECKING THE OIL PUMP

1.Check:
- Oil pump driven gear
- Oil pump housings
- Oil pump housing cover
  Cracks/wear/damage → Replace.

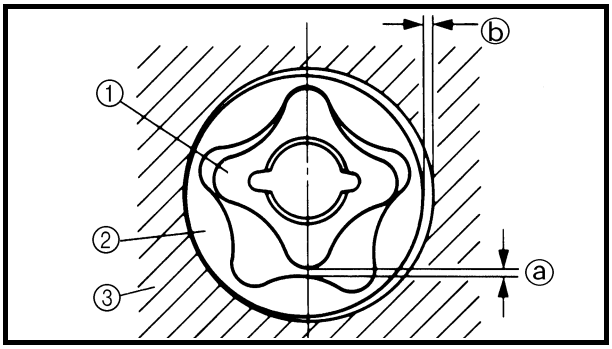

2.Measure:
- Tip clearance ⓐ
  (between the inner rotor ① and the outer rotor ②)
- Side clearance ⓑ
  (between the outer rotor ② and the pump housing ③)
  Out of specification → Replace the oil pump.

Tip clearance ⓐ:
0.12 mm (0.005 in)
<Limit>: 0.2 mm (0.008 in)
Side clearance ⓑ:
0.03 ~ 0.08 mm (0.001 ~ 0.003 in)

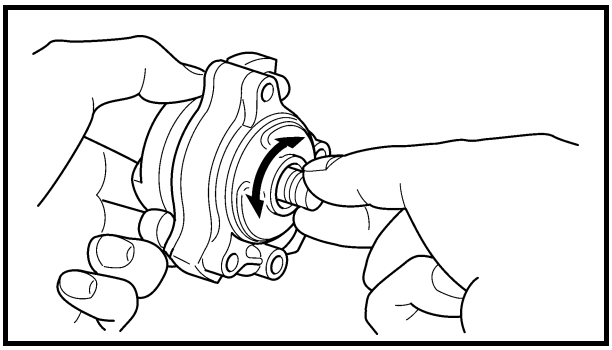

3.Check:
- Oil pump operation
  Unsmooth → Repeat steps (1) and (2) or replace the defective parts.

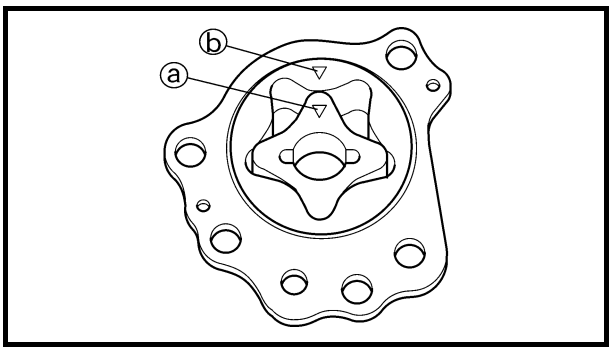

ASSEMBLING THE OIL PUMP

1.Install:
- Oil pump inner rotor 2
- Oil pump outer rotor 2

NOTE:
Align the match mark ⓐ on the inner rotor 2 with the match mark ⓑ on the outer rotor 2.

SHIFT SHAFT

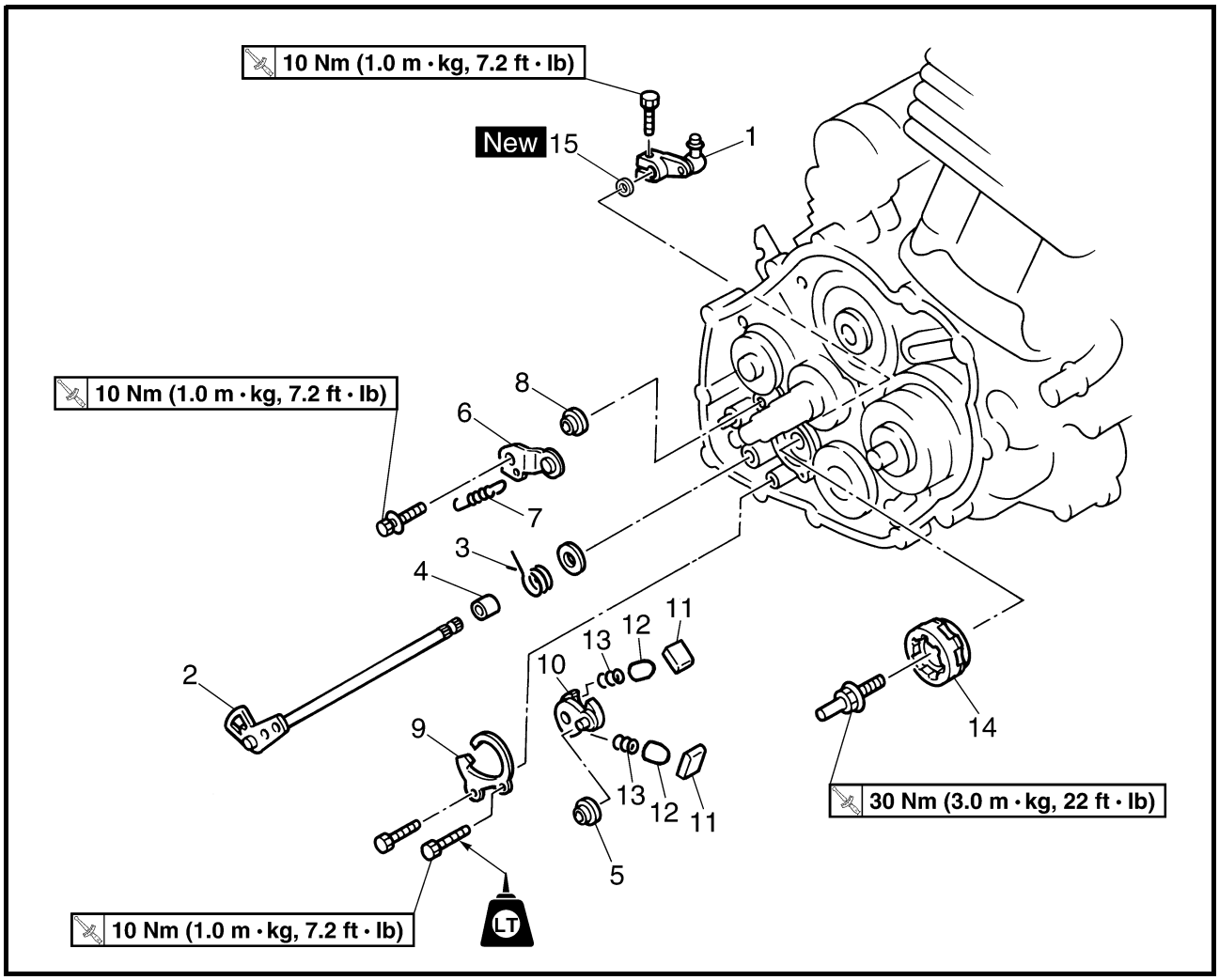

Order	Job name/Part name	Q'ty	Remarks
	Removing the shift shaft		Remove the parts in the order below.
	Clutch		Refer to "CLUTCH".
1	Shift arm	1	Refer to "INSTALLING THE SHIFT SHAFT".
2	Shift shaft	1	
3	Shift shaft spring	1	
4	Collar	1	
5	Roller	1	
6	Stopper lever	1	Refer to "INSTALLING THE STOPPER LEVER".
7	Stopper lever spring	1	
8	Roller	1	

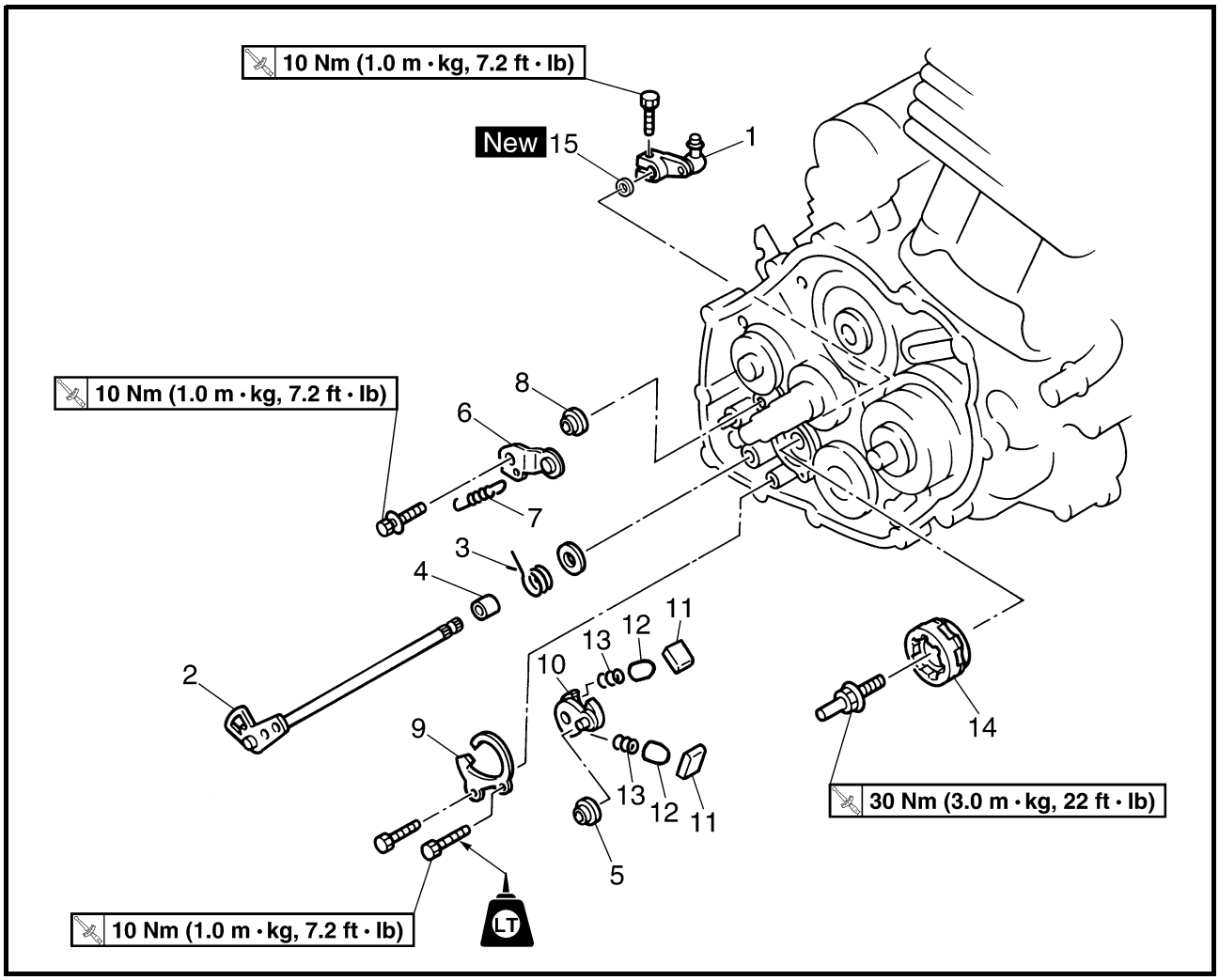

Order	Job name/Part name	Q'ty	Remarks
9	Shift guide	1	Refer to "INSTALLING THE SHIFT LEVER".
10	Shift lever	1	
11	Pawl	2	
12	Pawl pin	2	
13	Spring	2	
14	Segment	1	
15	Oil seal	1	
			For installation, reverse the removal procedure.

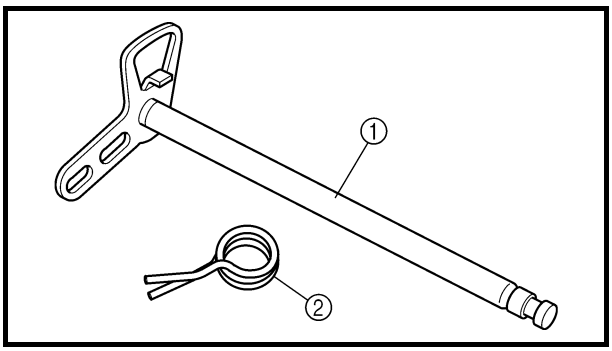

CHECKING THE SHIFT SHAFT

1.Check:
- Shift shaft ①
  Bends/damage/wear → Replace.
- Shift shaft spring ②
  Damage/wear → Replace.

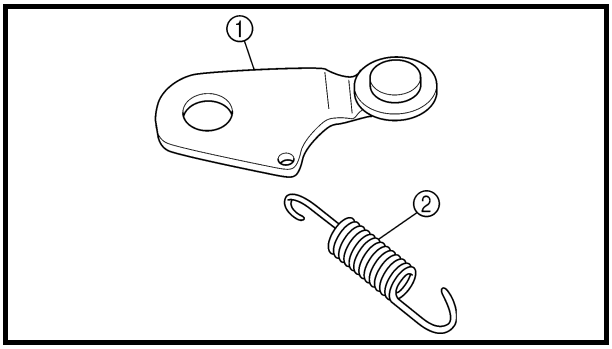

CHECKING THE STOPPER LEVER

1.Check:
- Stopper lever ①
  Bends/damage → Replace.
  Roller turns roughly → Replace the stopper lever.
- Stopper spring ②
  Damage → Replace.

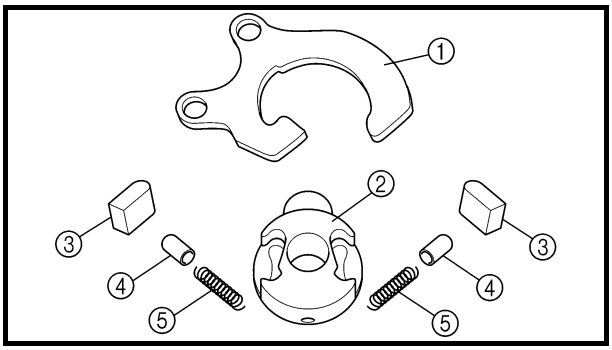

CHECKING THE SHIFT GUIDE AND SHIFT LEVER

1.Check:
- Shift guide ①
- Shift lever ②
- Pawl ③
- Pawl pin ④
- Spring ⑤
  Damage/wear → Replace.

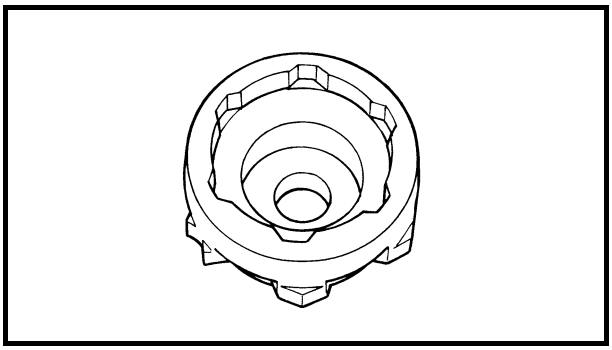

CHECKING THE SEGMENT

1.Check:
- Segment
  Damage/wear → Replace.

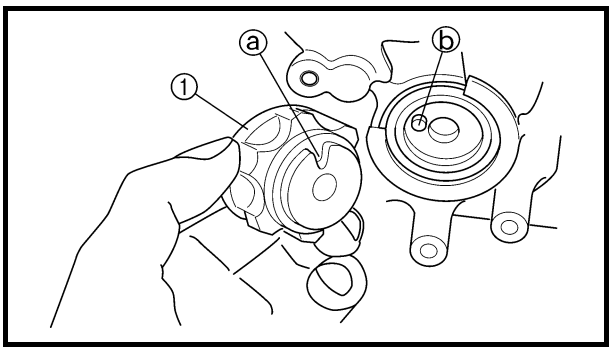

INSTALLING THE SHIFT LEVER

1.Install:
- Segment ①
- Segment bolt **30 Nm (3.0 m • kg, 22 ft • lb)**

NOTE:
Align the notch ⓐ on the segment with the pin ⓑ on the shift cam.

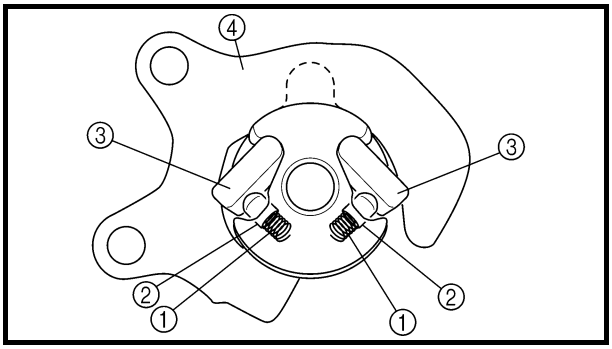

2.Install:
- Springs ①
- Pawl pins ②
- Pawls ③
- Shift guide ④
  (to the shift lever)

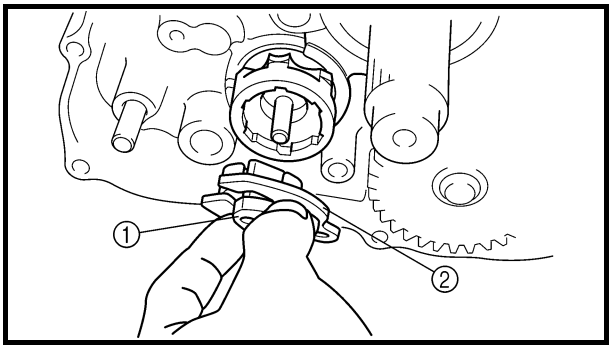

3.Install:
- Shift lever assembly ①
- Shift guide ②

NOTE:
The shift lever assembly is installed at the same time as the shift guide.

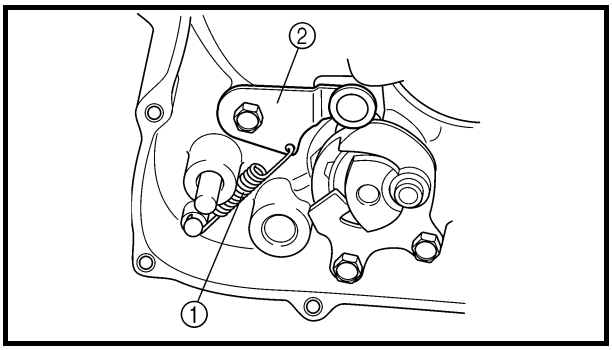

INSTALLING THE STOPPER LEVER

1.Install:
- Roller
- Stopper lever spring ①
- Stopper lever ②

NOTE:
- Hook the ends of the stopper lever spring onto the stopper lever and the crankcase boss.
- Mesh the stopper lever with the shift drum segment.

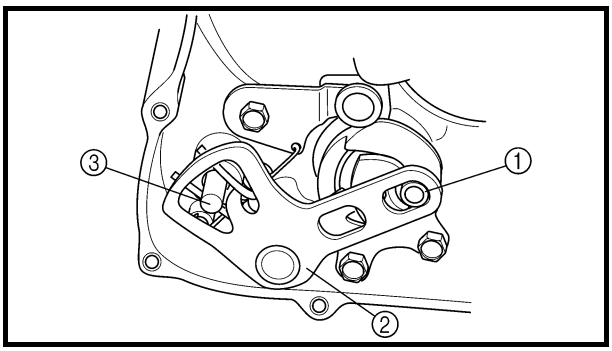

INSTALLING THE SHIFT SHAFT

1.Install:
- Roller ①
- Collar
- Shift shaft spring
- Shift shaft ②

NOTE:
- Install the end of the shift shaft spring onto the shift shaft spring stopper ③.
- Install the end of the shift shaft lever onto the roller ①.

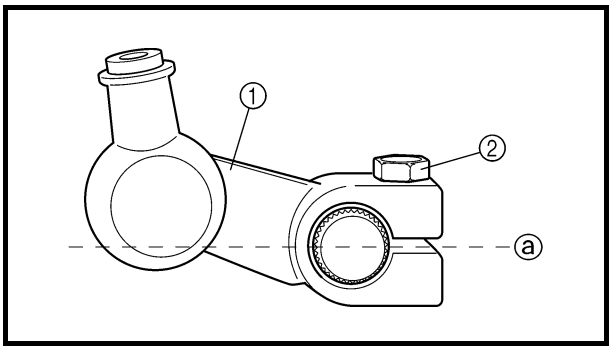

2.Install:
- Shift arm ①
- Bolt ② **10 Nm (1.0 m • kg, 7.2 ft • lb)**

NOTE:
Be sure to install the shaft arm so that position ⓐ is horizontal.

CRANKCASE

TIMING CHAIN AND SPEED SENSOR ROTOR

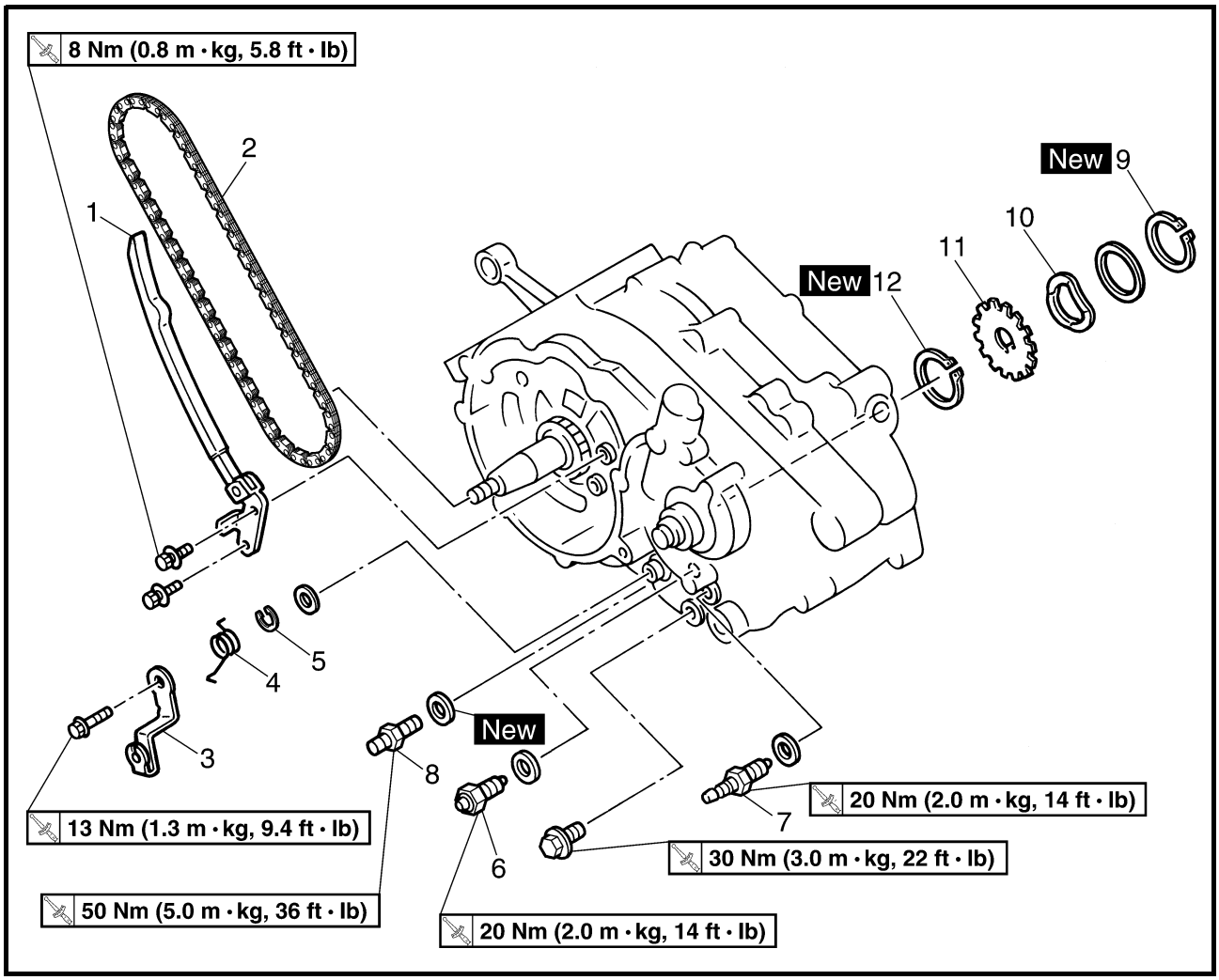

Order	Job name/Part name	Q'ty	Remarks
	Removing the timing chain and speed sensor rotor		Remove the parts in the order below.
	Engine assembly		Refer to "ENGINE REMOVAL".
	Cylinder head cover		Refer to "CYLINDER HEAD COVER".
	Cylinder head		Refer to "CAMSHAFT AND CYLINDER HEAD".
	Cylinder and piston		Refer to "CYLINDER AND PISTON".
	AC rotor		Refer to "AC MAGNETO".
	Clutch, balancer drive gear and balancer driven gear		Refer to "CLUTCH".
	Oil pump		Refer to "OIL PUMP".
	Shift shaft and shift drum segment		Refer to "SHIFT SHAFT".
1	Timing chain guide (intake)	1	
2	Timing chain	1	

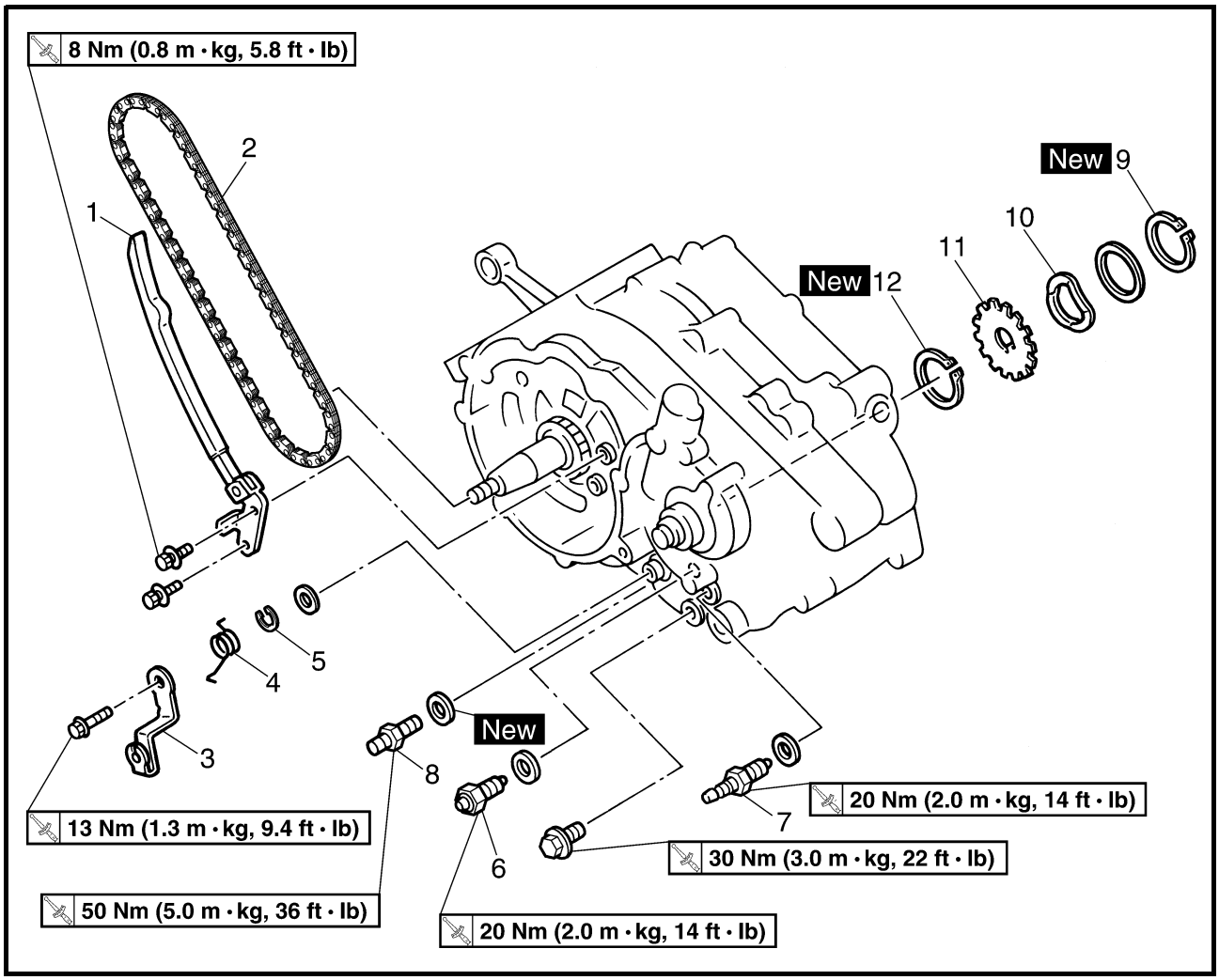

Order	Job name/Part name	Q'ty	Remarks
3	Reverse shift lever	1	
4	Reverse shift lever spring	1	
5	Circlip	1	
6	Neutral switch	1	
7	Reverse switch	1	
8	Oil pipe joint	1	
9	Circlip	1	
10	Wave washer	1	
11	Speed sensor rotor	1	
12	Circlip	1	
			For installation, reverse the removal procedure.

CRANKCASE

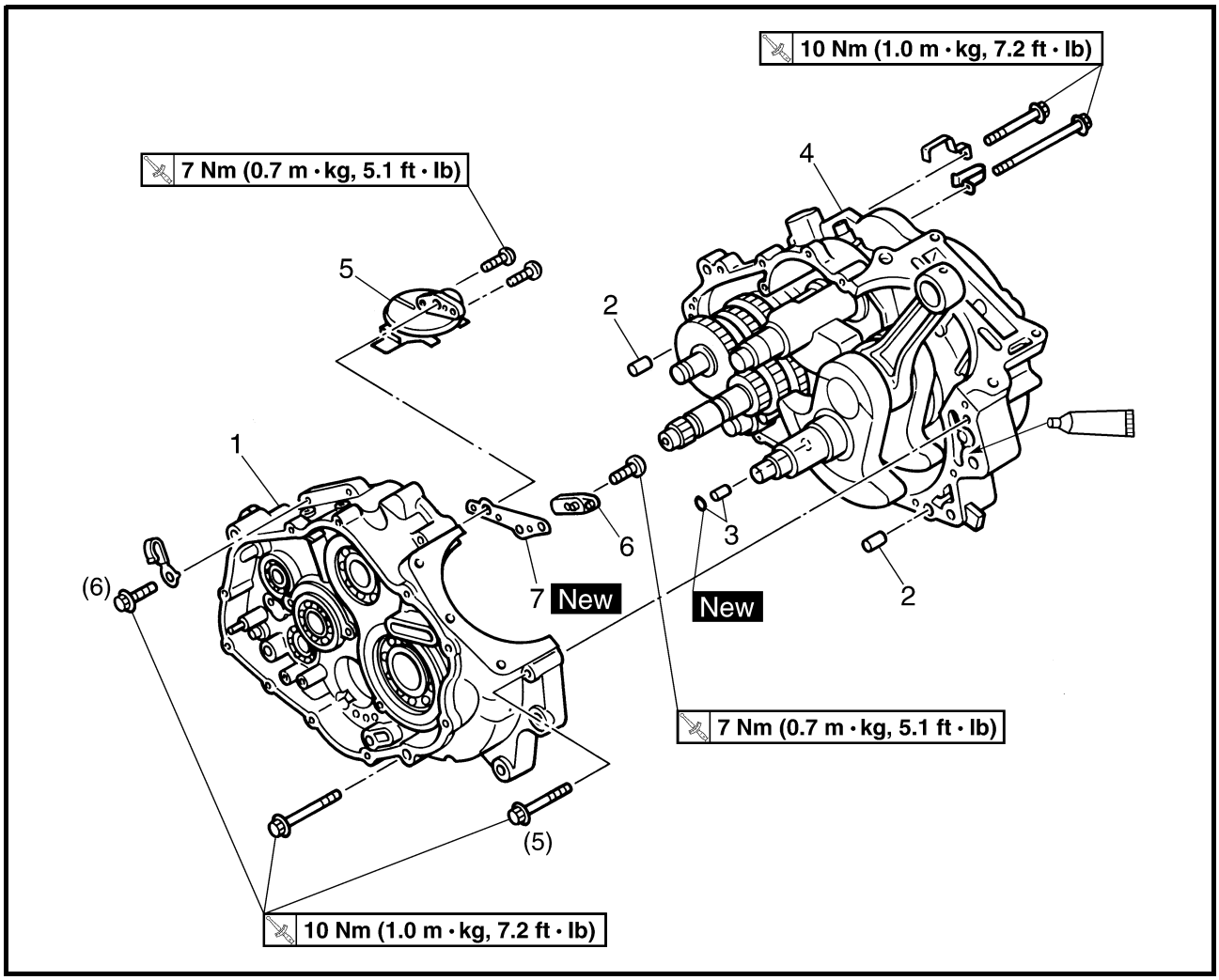

Order	Job name/Part name	Q'ty	Remarks
	Separating the crankcase		Remove the parts in the order below.
1	Right crankcase	1	Refer to "CRANKCASE".
2	Dowel pin	2	
3	Dowel pin/O-ring	1/1	
4	Left crankcase	1	
5	Oil strainer	1	
6	Cover	1	
7	Oil strainer gasket	1	
			For installation, reverse the removal procedure.

CRANKCASE BEARING

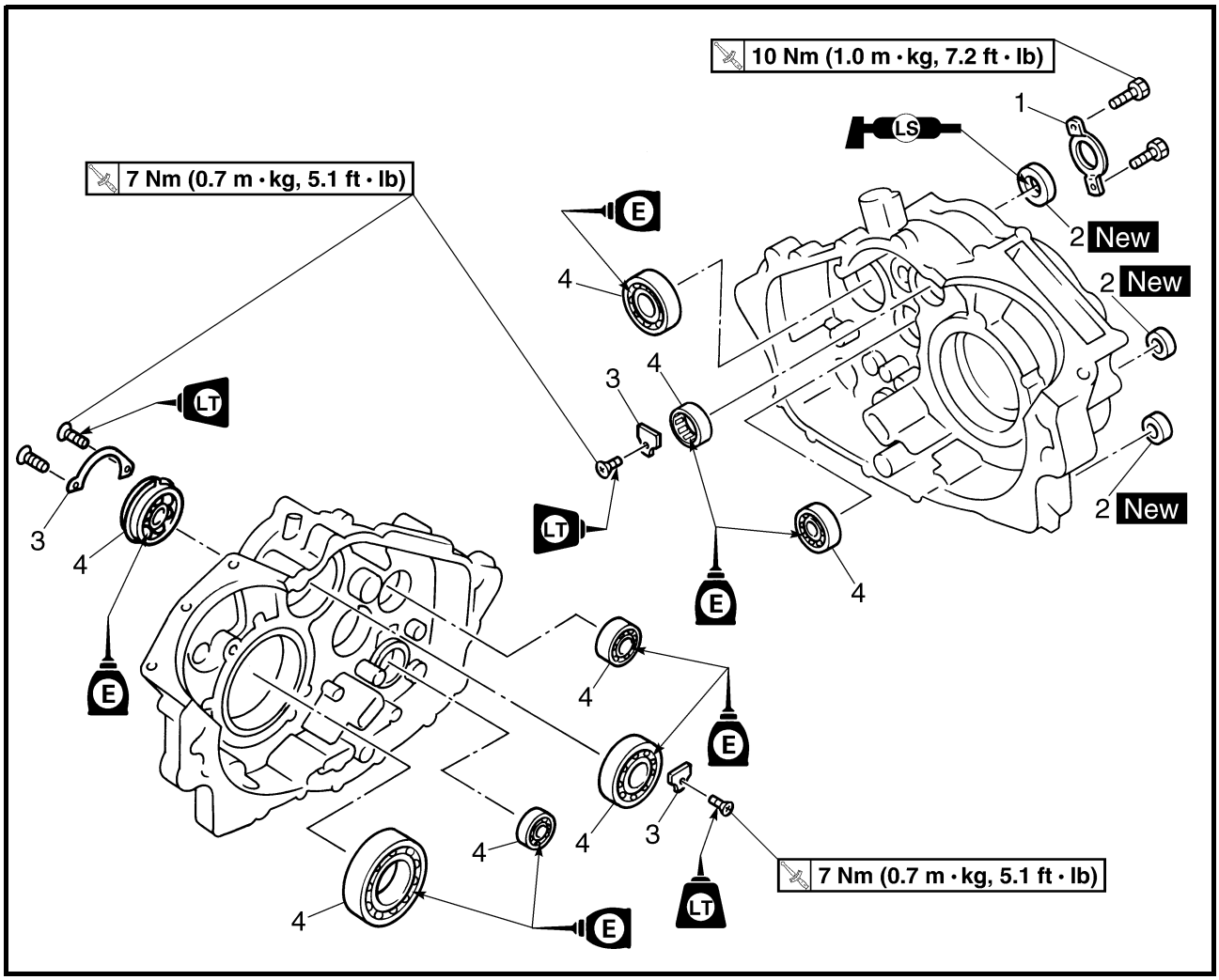

Order	Job name/Part name	Q'ty	Remarks
	Removing the crankcase bearing		Remove the parts in the order below.
	Crankshaft and balancer		Refer to "CRANKSHAFT AND BALANCER".
	Transmission		Refer to "TRANSMISSION".
1	Oil seal retainer	1	
2	Oil seal	3	
3	Bearing retainer	3	
4	Bearing	8	
			For installation, reverse the removal procedure.

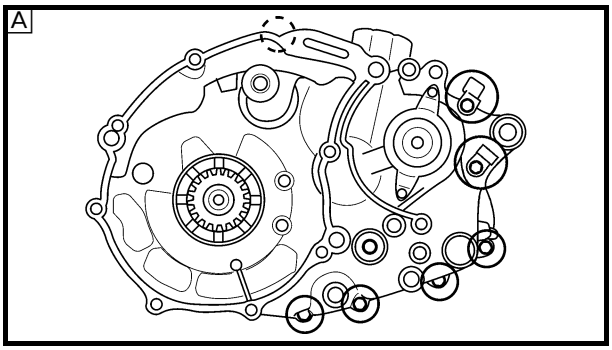

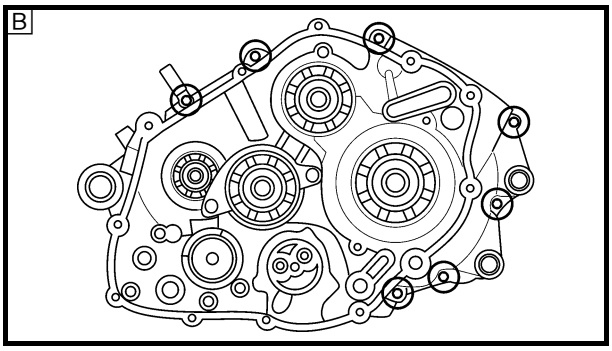

SEPARATING THE CRANKCASE

1.Separate:
- Left crankcase
- Right crankcase

****

Separation steps:

- Remove the crankcase bolts.

NOTE:
- Loosen each bolt 1/4 of a turn at a time and after all the bolts are loosened, remove them.
- Loosen the bolts in stages, using a criss-cross pattern.

A Left crankcase
B Right crankcase

- Remove the right crankcase.

CAUTION:

Use a soft hammer to tap on one side of the crankcase. Tap only on reinforced portions of the crankcase. Do not tap on the crankcase mating surfaces. Work slowly and carefully. Make sure that the crankcase halves separate evenly.

- Remove the dowel pins and O-ring.

****

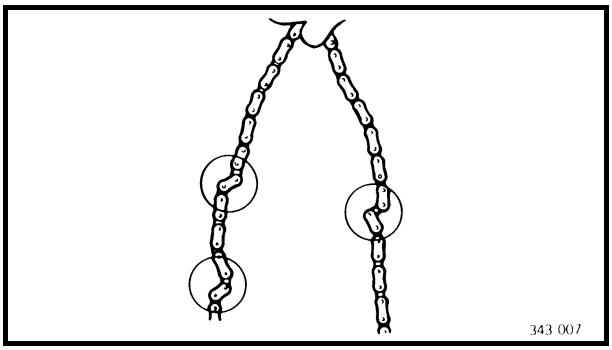

CHECKING THE TIMING CHAIN AND GUIDE

1.Check:
- Timing chain
  Cracks/stiff → Replace the timing chain and camshaft sprocket as a set.

2.Check:
- Intake side timing chain guide
  Wear/damage → Replace.

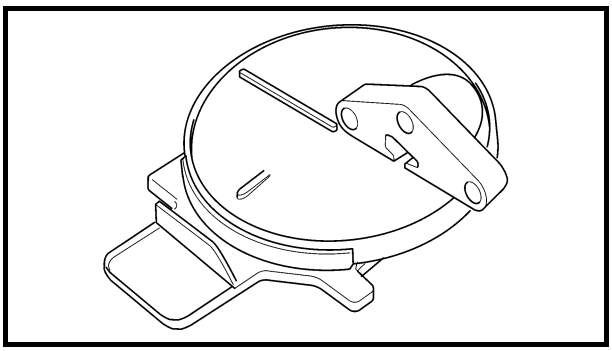

CHECKING THE OIL STRAINER

1.Check:
- Oil strainer
  Damage → Replace.
  Contaminations → Clean with engine oil.

CHECKING THE CRANKCASE

1. Thoroughly wash the case halves in a mild solvent.
2. Clean all the gasket mating surfaces and crankcase mating surfaces thoroughly.
3. Check:
   - Crankcase
     Cracks/damage → Replace.
   - Oil delivery passages
     Clogged → Blow out with compressed air.

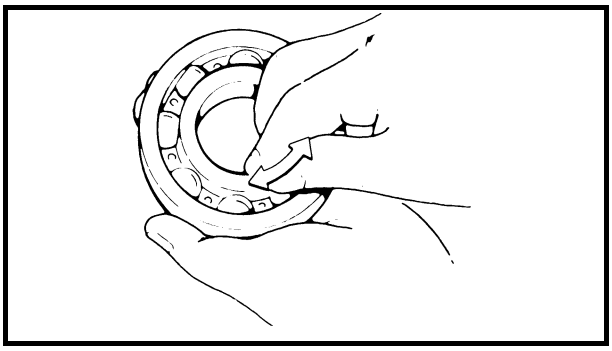

CHECKING THE BEARINGS

1. Check:
   - Bearing
     Clean and lubricate, then rotate the inner race with a finger.
     Roughness → Replace.

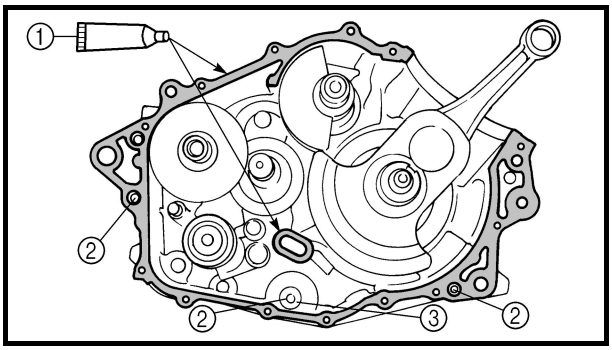

ASSEMBLING THE CRANKCASE

1. Apply:
   - Sealant (Quick Gasket®) ①
     (to the mating surfaces of both case halves)

Sealant (Quick Gasket®):
P/N. ACC-11001-05-01
Yamaha bond No. 1215:
P/N. 90890-85505

2. Install:
   - Dowel pin ②
   - O-ring ③ New

3.Fit the right crankcase onto the left crankcase. Tap lightly on the case with a soft hammer.

CAUTION:

Before installing and torquing the crankcase holding bolts, be sure to check whether the transmission is functioning properly by manually rotating the shift cam in both directions.

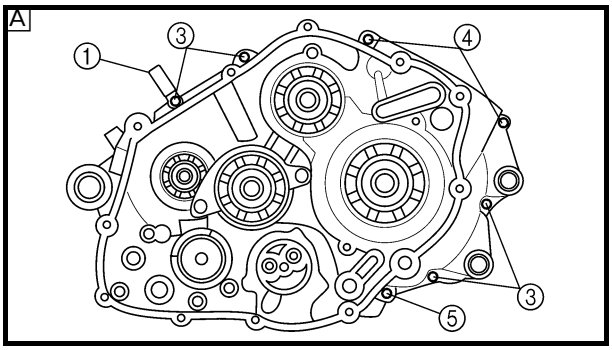

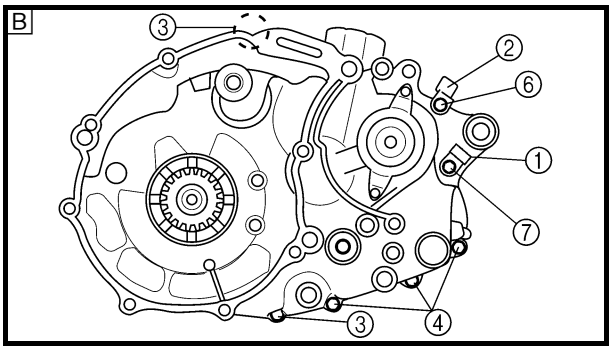

4.Install:
- Lead guides ①
- Hose guide ②
- Crankcase bolts

5.Tighten:
- Crankcase bolts
  (follow the proper tightening sequence)

	10 Nm (1.0 m • kg, 7.2 ft • lb)

A Right crankcase
B Left crankcase
③ Bolt: ℓ = 30 mm
④ Bolt: ℓ = 45 mm
⑤ Bolt: ℓ = 60 mm
⑥ Bolt: ℓ = 65 mm
⑦ Bolt: ℓ = 80 mm

NOTE:

Tighten the bolts in stages, using a crisscross pattern.

6.Apply:
- 4-stroke engine oil
  (to the crank pin, bearing and oil delivery hole)

7.Check:
- Crankshaft and transmission operation
  Unsmooth operation → Repair.

CRANKSHAFT AND BALANCER

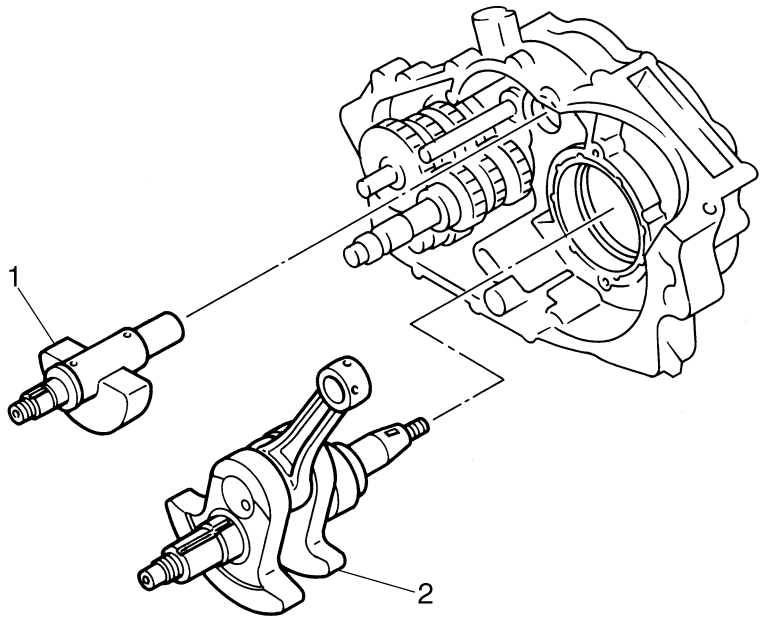

Order	Job name/Part name	Q'ty	Remarks
	Removing the crankshaft and balancer		Remove the parts in the order below.
	Crankcase		Separate. Refer to "CRANKCASE".
1	Balancer	1	
2	Crankshaft	1	Refer to "REMOVING/INSTALLING THE CRANKSHAFT". For installation, reverse the removal procedure.

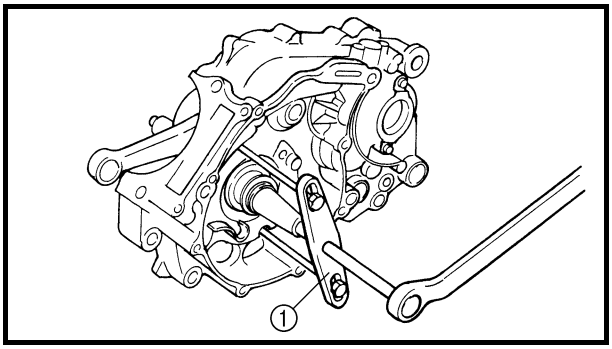

REMOVING THE CRANKSHAFT

1.Remove:

- Crankshaft
  Use a crankcase separating tool ①.

	Crankcase separating tool: **P/N. YU-01135-A, 90890-01135**

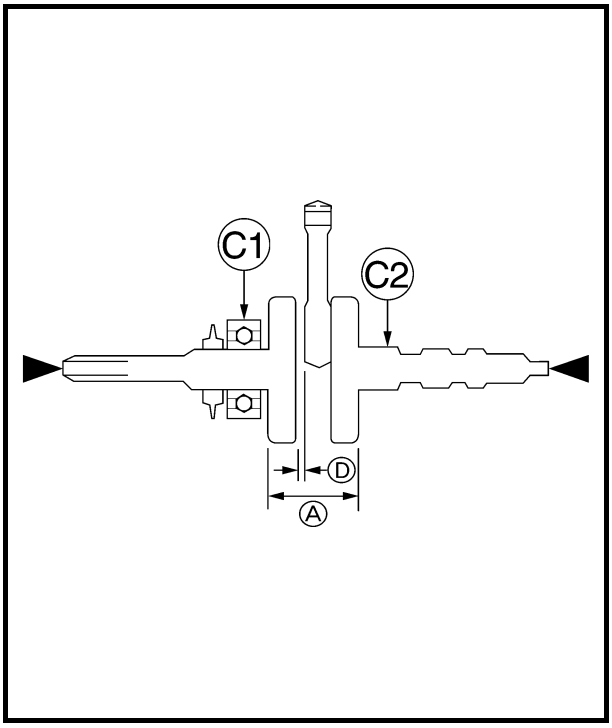

CHECKING THE CRANKSHAFT

1.Measure:

- Crank width Ⓐ
  Out of specification → Replace the crankshaft.

	Crank width: **74.95 ~ 75.00 mm** **(2.9508 ~ 2.9528 in)**

- Side clearance Ⓓ
  Out of specification → Replace the crankshaft.

	Big end side clearance: **0.32 ~ 0.64 mm** **(0.0126 ~ 0.0252 in)** **<Limit>: 1.0 mm (0.040 in)**

- Runout Ⓒ
  Out of specification → Replace the crankshaft.

	Runout limit: **C1: 0.03 mm (0.0012 in)** **C2: 0.03 mm (0.0012 in)**

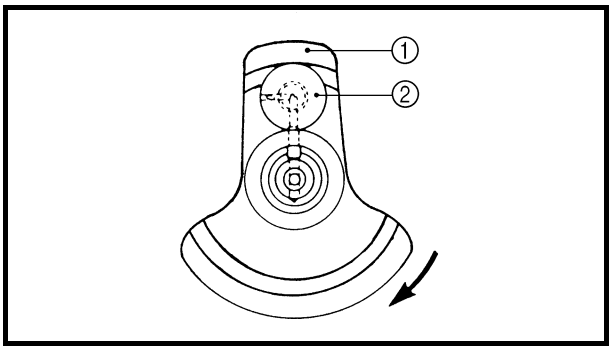

****

Crankshaft reassembling point:

The crankshaft ① and the crank pin ② oil passages must be properly interconnected with a tolerance of less than 1 mm (0.04 in).

****

CAUTION:

The buffer boss and woodruff key should be replaced when removed from the crankshaft.

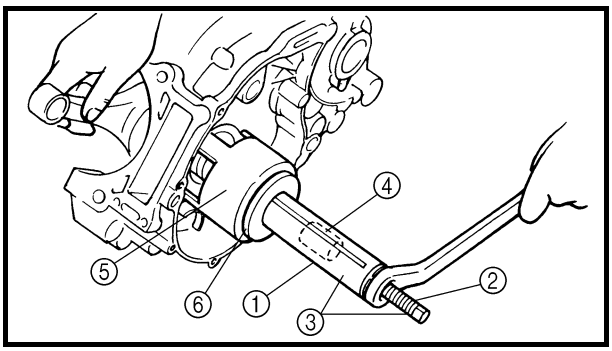

INSTALLING THE CRANKSHAFT

1.Install:

- Crankshaft

Crankshaft installer pot ①:
P/N. 90890-01274
Crankshaft installer bolt ②:
P/N. 90890-01275
Crankshaft installer set ③:
P/N. YU-90050
Adapter ④:
P/N. YM-90069, 90890-04059
Spacer (crankshaft installer) ⑤:
P/N. YM-91044, 90890-04081
Spacer ⑥:
P/N. 90890-01016

NOTE:

Hold the connecting rod at the Top Dead Center (TDC) with one hand while turning the nut of the installing tool with the other. Operate the installing tool until the crankshaft bottoms against the bearing.

CAUTION:

Apply engine oil to each bearing to protect the crankshaft against scratches and to make installation easier.

TRANSMISSION

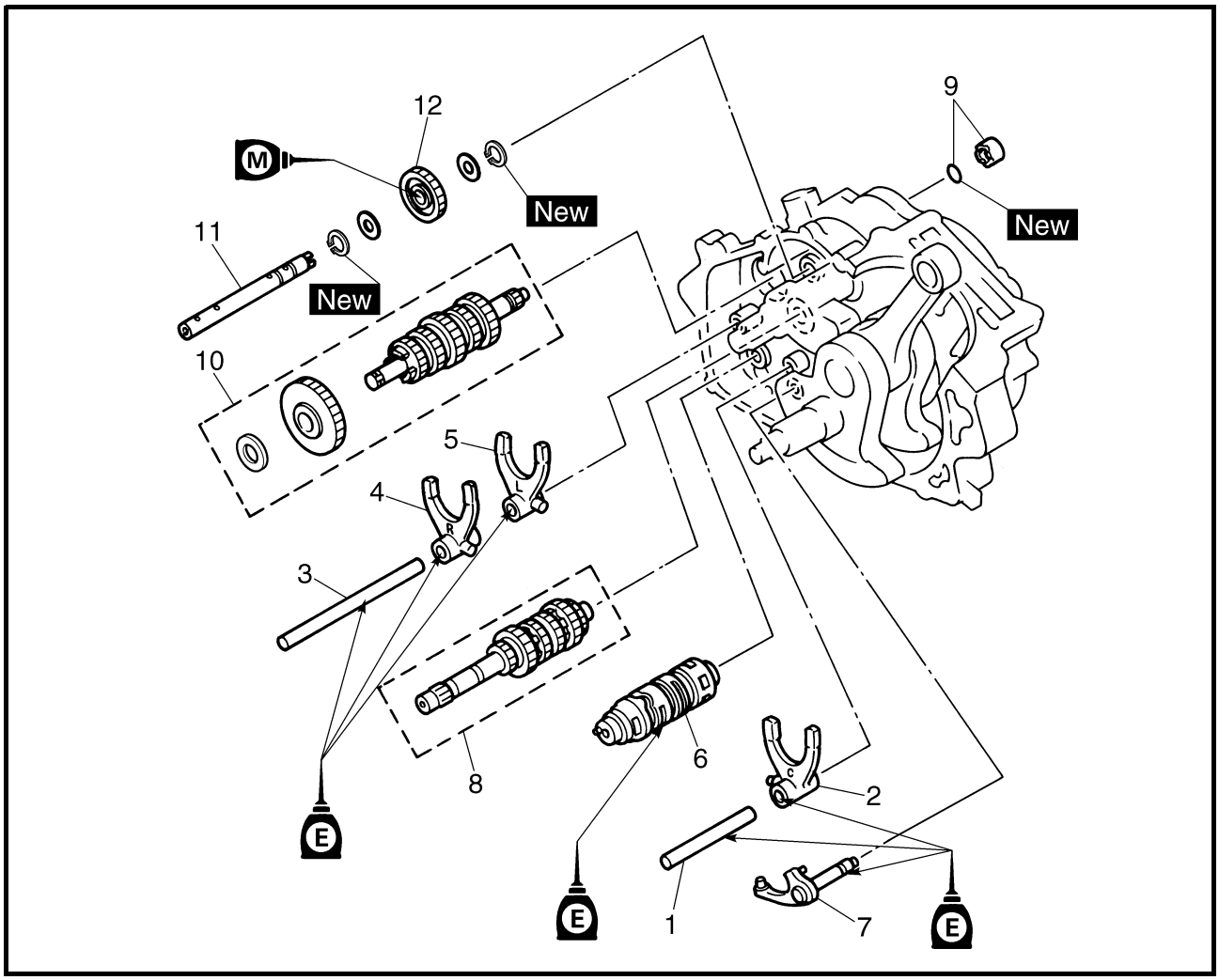

Order	Job name/Part name	Q'ty	Remarks
	Removing the transmission		Remove the parts in the order below.
	Crankcase		Separate. Refer to "CRANKCASE".
1	Shift fork guide bar (short)	1	
2	Shift fork "C"	1	
3	Shift fork guide bar (long)	1	Refer to "INSTALLING THE TRANSMISSION".
4	Shift fork "R"	1	
5	Shift fork "L"	1	
6	Shift drum	1	
7	Reverse shift shaft	1	
8	Main axle assembly	1	
9	Spacer/O-ring	1/1	
10	Drive axle	1	

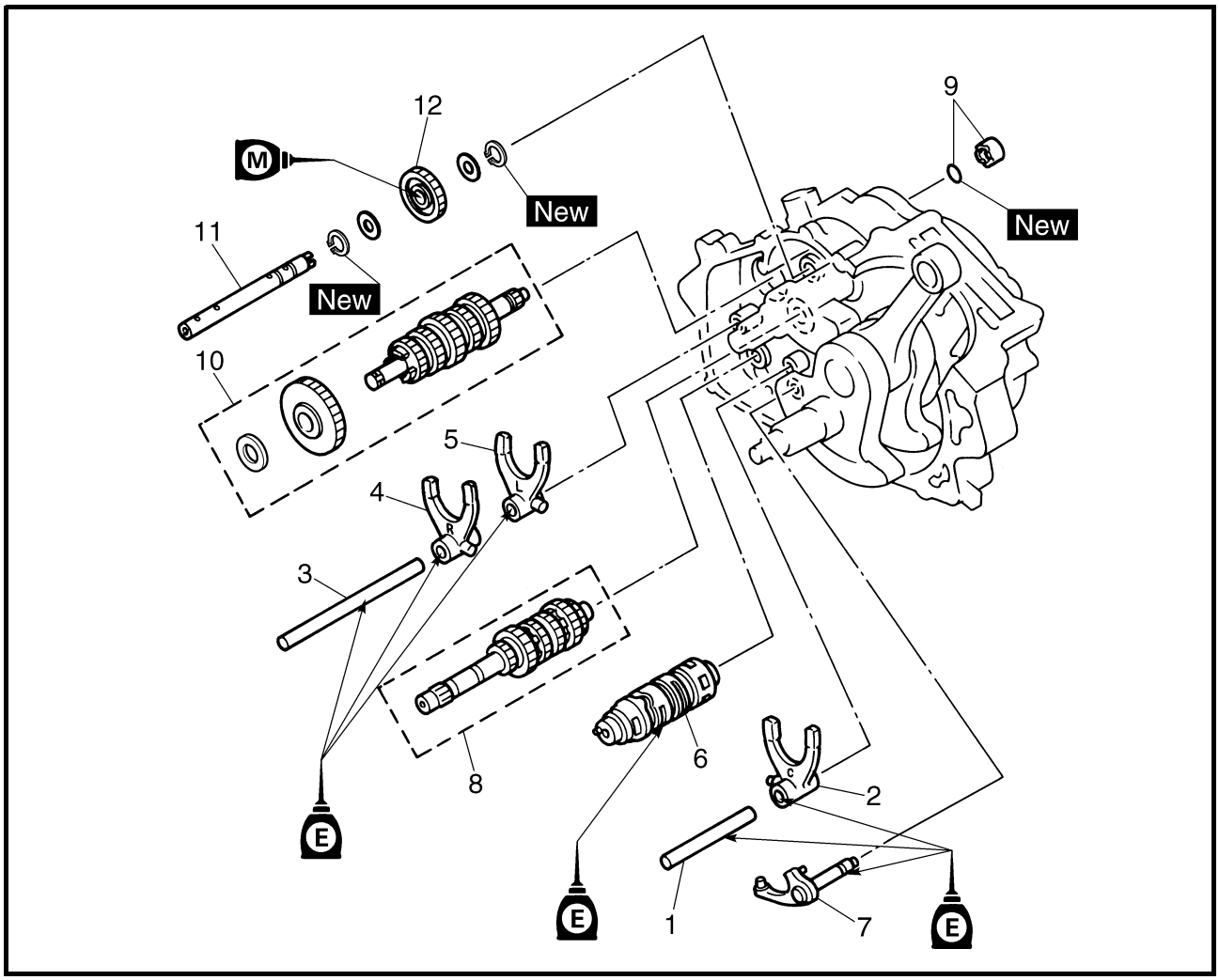

Order	Job name/Part name	Q'ty	Remarks
11	Counter axle	1	
12	Counter gear	1	
			For installation, reverse the removal procedure.

MAIN AXLE

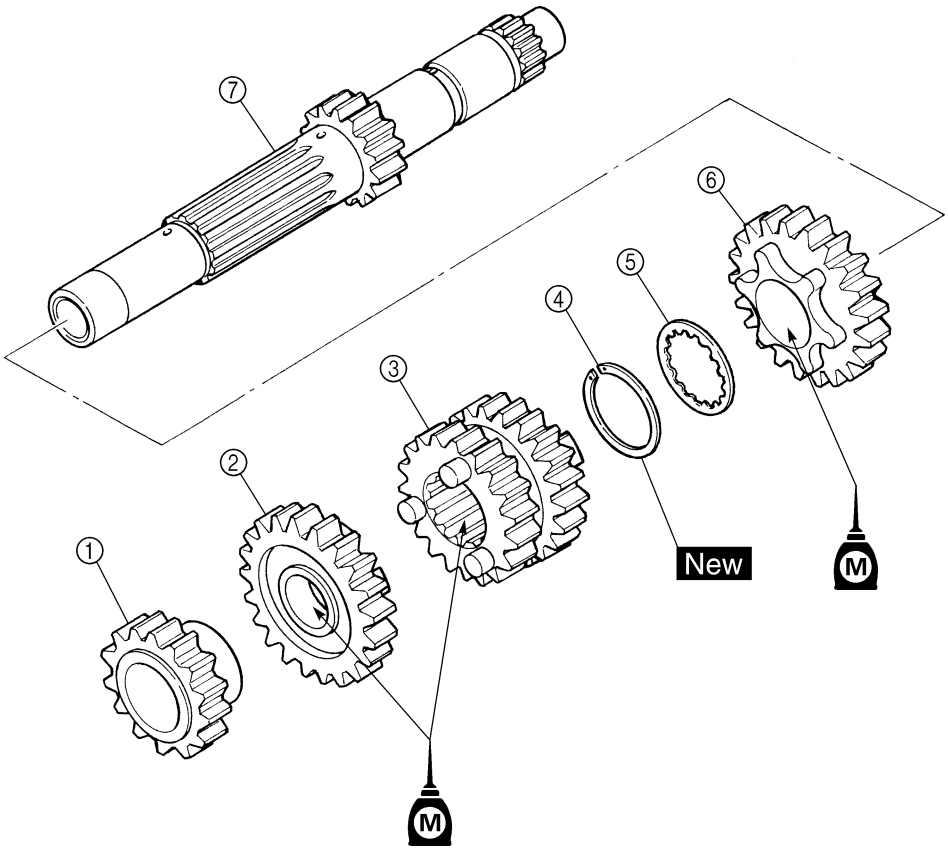

Order	Job name/Part name	Q'ty	Remarks
	Disassembling the main axle		Remove the parts in the order below.
①	Reverse pinion gear	1	
②	4th pinion gear	1	
③	2nd/3rd pinion gear	1	
④	Circlip	1	Refer to "ASSEMBLING THE MAIN AXLE AND DRIVE AXLE".
⑤	Toothed washer	1	
⑥	5th pinion gear	1	
⑦	Main axle/1st pinion gear	1	
			For assembly, reverse the disassembly procedure.

DRIVE AXLE

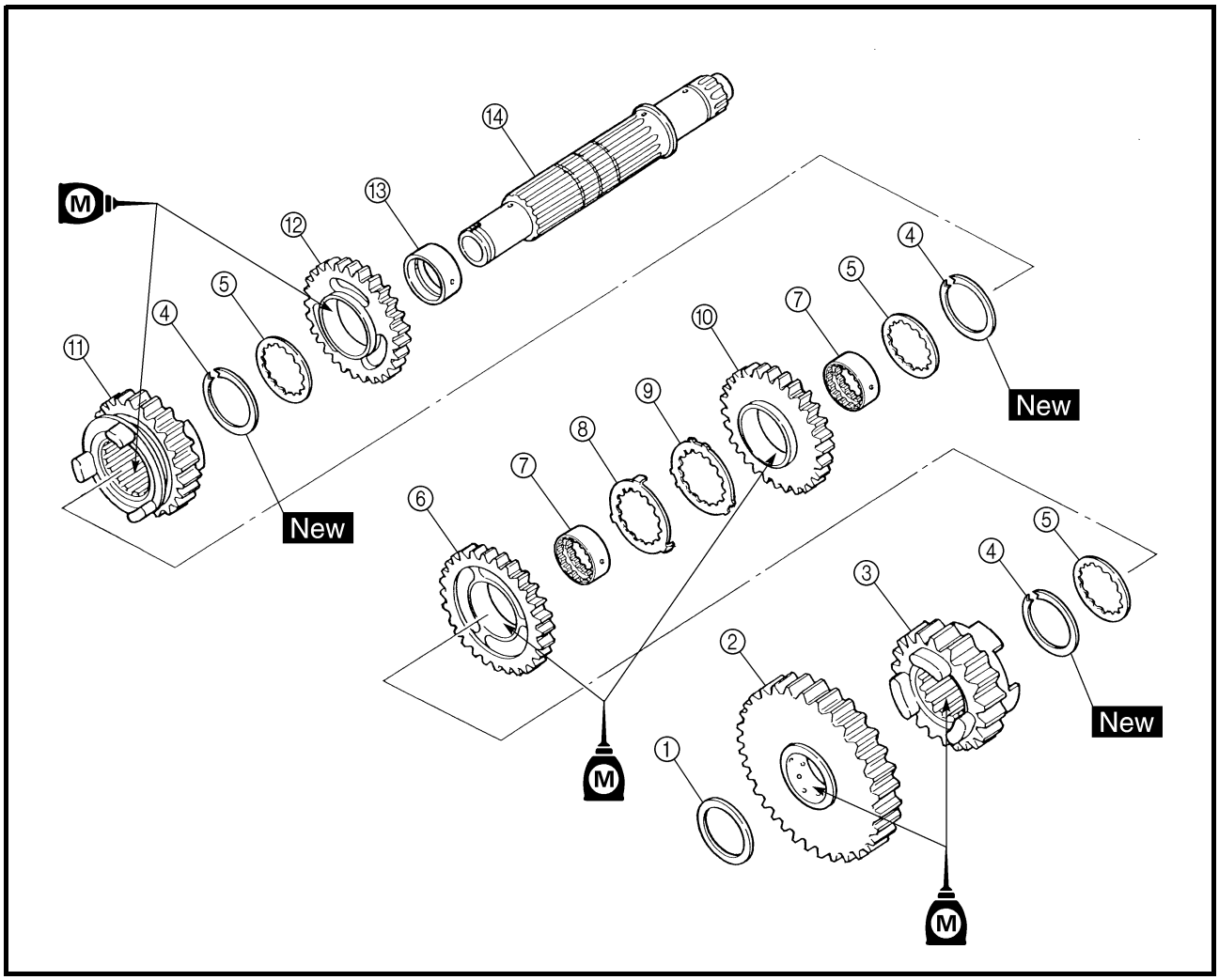

Order	Job name/Part name	Q'ty	Remarks
	Disassembling the drive axle		Remove the parts in the order below.
①	Washer	1	
②	1st wheel gear	1	
③	5th wheel gear	1	
④	Circlip	3	Refer to "ASSEMBLING THE MAIN AXLE AND DRIVE AXLE".
⑤	Toothed washer	3	
⑥	3rd wheel gear	1	
⑦	Toothed collar	2	
⑧	Toothed lock washer	1	
⑨	Toothed lock washer retainer	1	
⑩	2nd wheel gear	1	

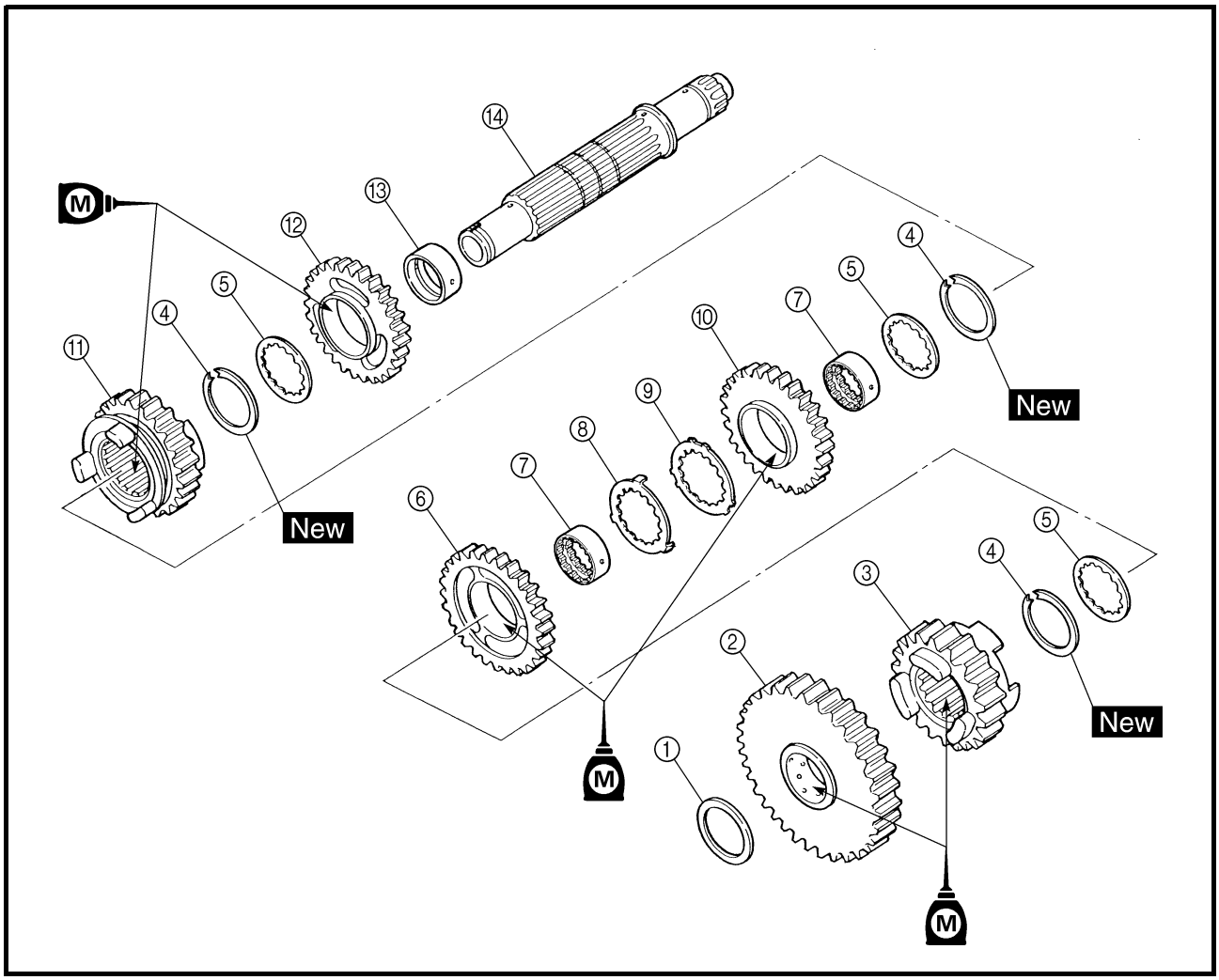

Order	Job name/Part name	Q'ty	Remarks
⑪	4th wheel gear	1	
⑫	Reverse wheel gear	1	
⑬	Collar	1	
⑭	Drive axle	1	
			For assembly, reverse the disassembly procedure.

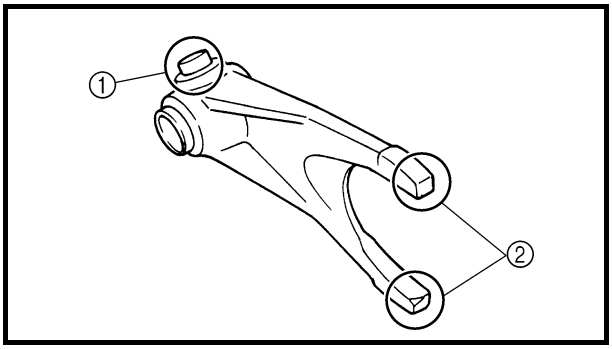

CHECKING THE SHIFT FORK

1.Check:
- Shift fork cam follower ①
- Shift fork pawl ②
  Scoring/bends/wear/damage → Replace.

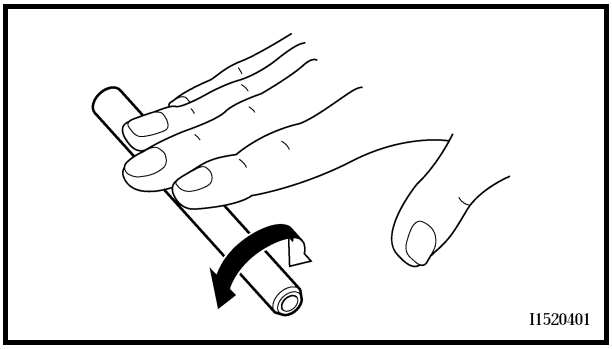

2.Check:
- Guide bar
  Roll the guide bar on a flat surface.
  Bends → Replace.

⚠ WARNING

Do not attempt to straighten a bent guide bar.

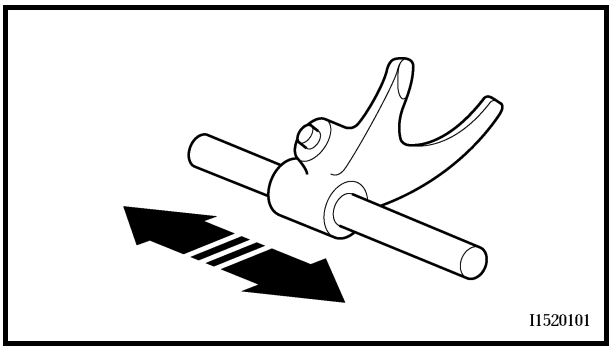

3.Check:
- Shift fork movement
  (on the guide bar)
  Unsmooth operation → Replace the shift fork and the guide bar as a set.

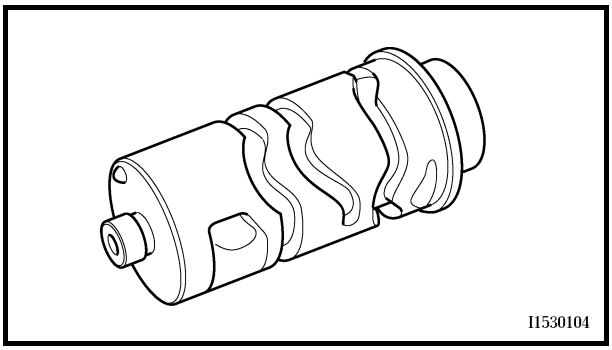

CHECKING THE SHIFT DRUM

1.Check:
- Shift cam grooves
  Scratches/wear/damage → Replace.

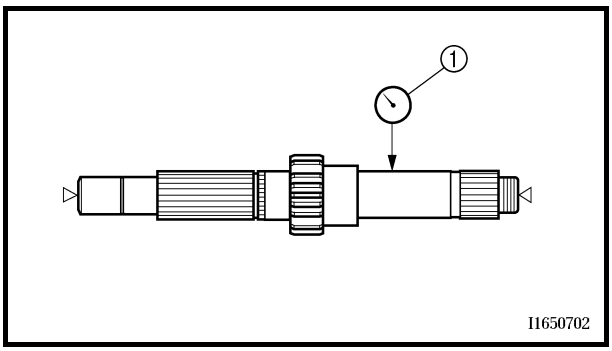

CHECKING THE TRANSMISSION

1.Measure:
- Main axle runout
  (with a centering device and dial gauge ①)
  Out of specification → Replace the main axle.

	Maximum main axle runout: 0.08 mm (0.0031 in)

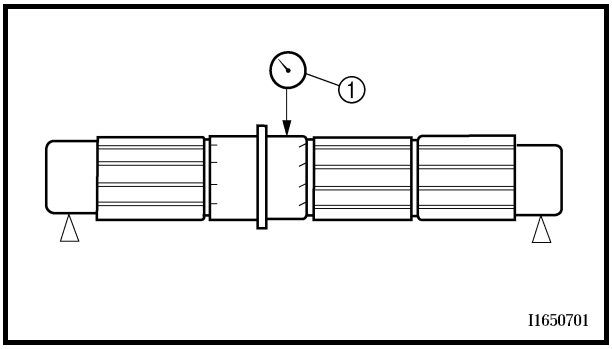

2.Measure:
- Drive axle runout
  (with a centering device and dial gauge ①)
  Out of specification → Replace the drive axle.

	Maximum drive axle runout: 0.08 mm (0.0031 in)

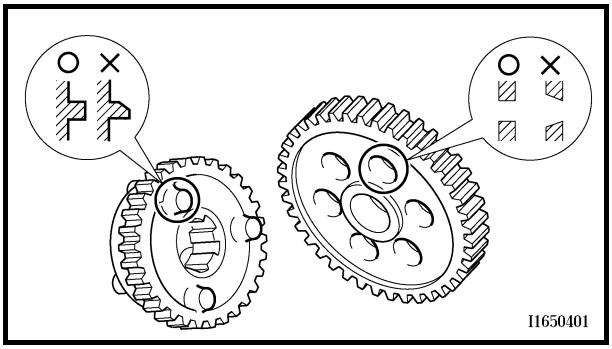

3.Check:
- Transmission gears
  Blue discoloration/pitting/wear → Replace the defective gear(s).
- Transmission gear dogs
  Cracks/damage/rounded edges → Replace the defective gear(s).

4.Check:
- Transmission gear engagement
  (each pinion gear to its respective wheel gear)
  Incorrect → Reassemble the transmission axle assemblies.

5.Check:
- Transmission gear movement
  Rough movement → Replace the defective part(s).

6.Check:
- Circlips
  Bends/damage/looseness → Replace.

ASSEMBLING THE MAIN AXLE AND DRIVE AXLE

1.Install:
- Toothed washer ①
- Circlip ② New

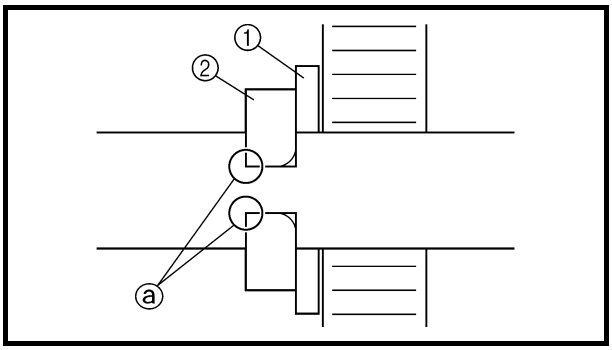

NOTE:
- Be sure the circlip shap-edged corner ⓐ is positioned opposite side to the toothed washer and gear.
- Be sure the circlip end ⓑ is positioned at axle spline groove ⓒ.

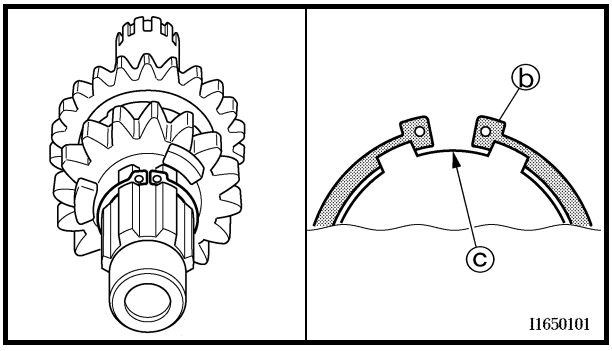

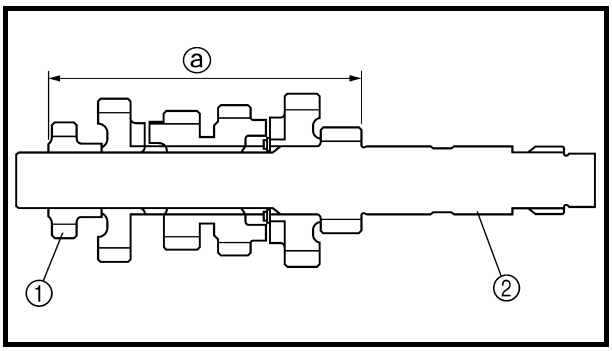

2.Install:
- Reverse pinion gear ①

NOTE:
Press the reverse pinion gear into the main axle ②, as shown in the illustration.

ⓐ 115.65 ~ 115.85 mm (4.553 ~ 4.561 in)

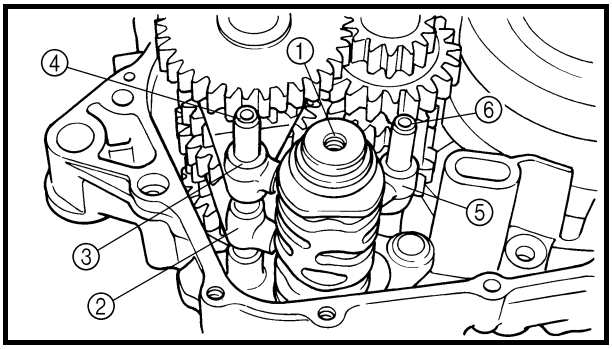

INSTALLING THE TRANSMISSION

1.Install:
- Shift drum ①
- Shift fork “L” ②
- Shift fork “R” ③
- Shift fork guide bar (long) ④
- Shift fork “C” ⑤
- Shift fork guide bar (short) ⑥

NOTE:
The embossed marks on the shift forks should face towards the right side of the engine and be in the following sequence: “R”, “C”, “L”.

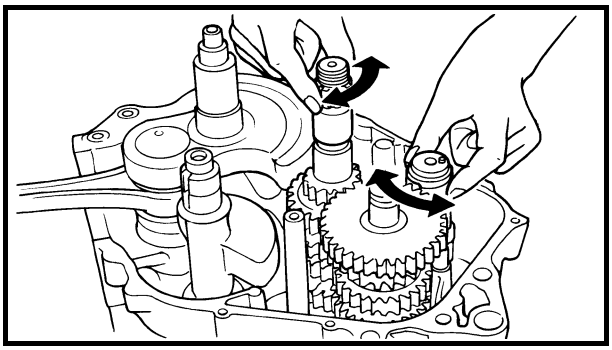

2.Check:
- Transmission
  Rough movement → Repair.

NOTE:
- Oil each gear and bearing thoroughly.
- Before assembling the crankcase, be sure that the transmission is in neutral and that the gears turn freely.

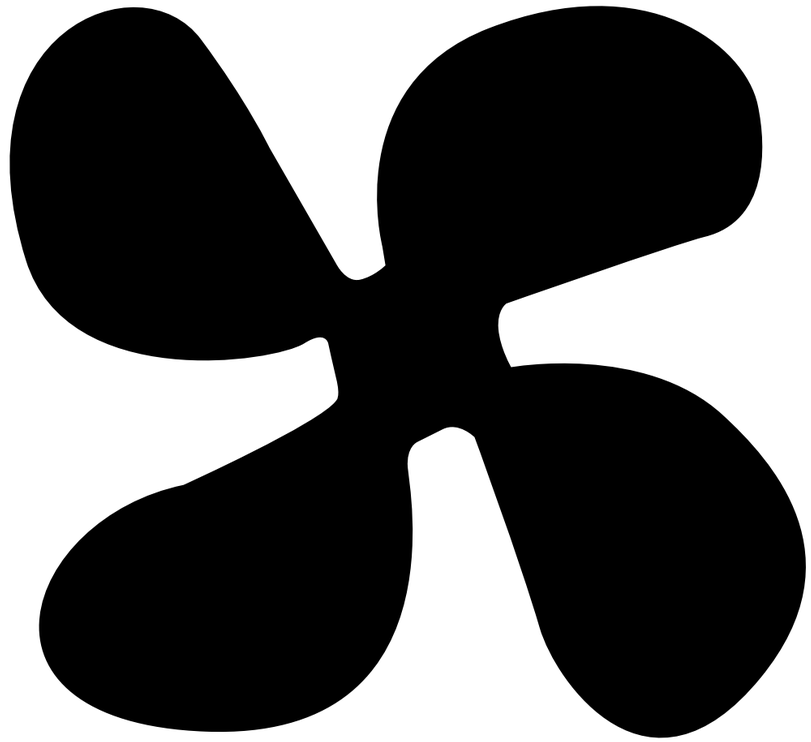

COOL 6

CHAPTER 6.
COOLING SYSTEM

COOLING SYSTEM

RADIATOR

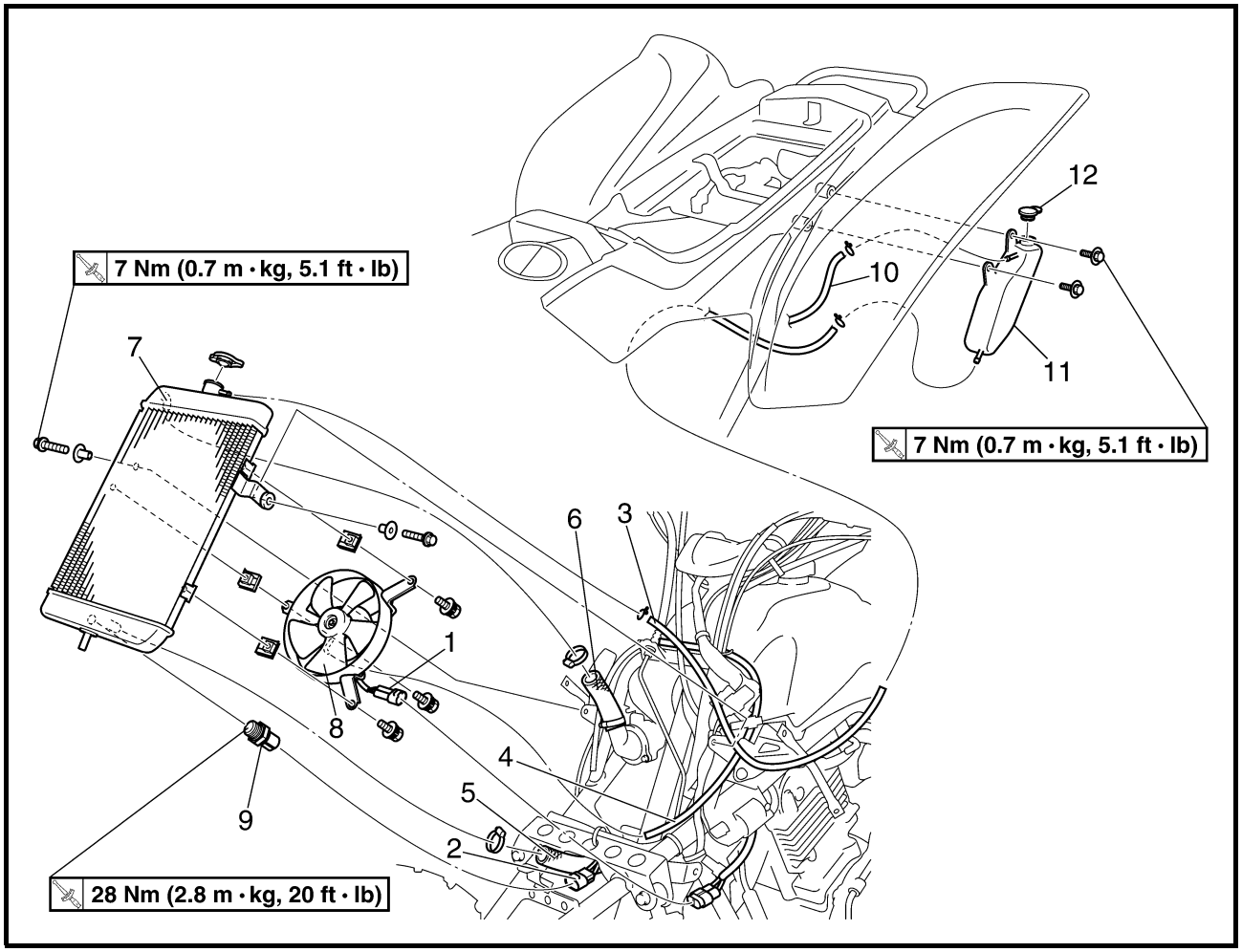

Order	Job name/Part name	Q'ty	Remarks
	Removing the radiator		Remove the parts in the order below.
	Front panel and front fender		Refer to "SEAT, FENDERS AND FUEL TANK" in CHAPTER 3.
	Coolant		Drain.
1	Radiator fan coupler	1	Disconnect.
2	Thermo switch coupler	1	Disconnect.
3	Coolant reservoir hose	1	
4	Radiator fan breather hose	1	Disconnect.
5	Radiator outlet hose	1	Disconnect.
6	Radiator inlet hose	1	Disconnect.
7	Radiator	1	
8	Radiator fan	1	
9	Thermo switch 1	1	
10	Coolant reservoir breather hose	1	

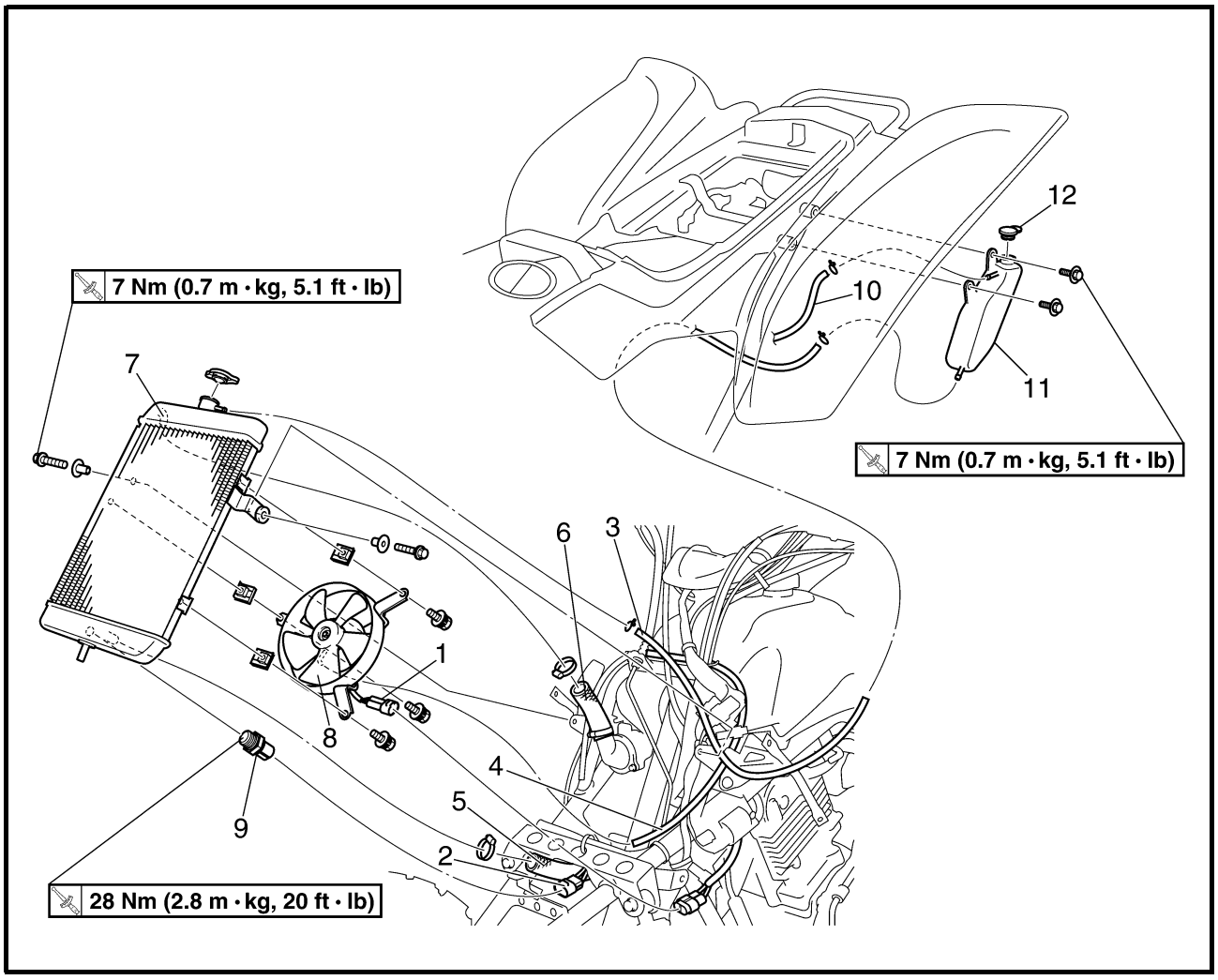

Order	Job name/Part name	Q'ty	Remarks
11	Coolant reservoir	1	
12	Coolant reservoir cap	1	
			For installation, reverse the removal procedure.

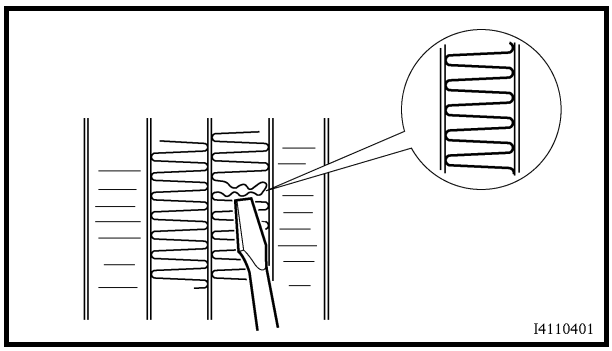

CHECKING THE RADIATOR

1.Check:
- Radiator fins
  Obstruction → Clean.
  Apply compressed air to the rear of the radiator.
  Damage → Repair or replace.

NOTE:
Straighten any flattened fins with a thin, flathead screwdriver.

2.Check:
- Radiator hoses
  Cracks/damage → Replace.

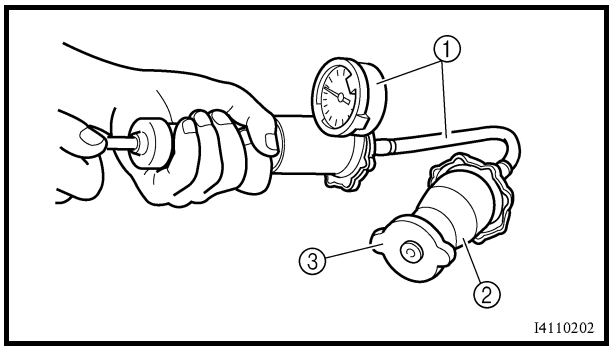

3.Measure:
- Radiator cap opening pressure
  Below the specified pressure → Replace the radiator cap.

Radiator cap opening pressure:
95 ~ 125 kPa
(0.95 ~ 1.25 kg/cm^2,
13.8 ~ 18.1 psi)

****

Measurement steps:
- Install the radiator cap tester ① and adapter ② onto the radiator cap ③.

Radiator cap tester:
P/N. YU-24460-01, 90890-01325
Adapter:
P/N. YU-33984, 90890-01352

- Apply the specified pressure for ten seconds and make sure that there is no drop in pressure.

****

4.Check:
- Radiator fan
  Damage → Replace.
  Malfunction → Check and repair.
  Refer to “COOLING SYSTEM” in CHAPTER 9.

INSTALLING THE RADIATOR

1. Fill:
- Cooling system
  (with the specified amount of the recommended coolant)
  Refer to “CHANGING THE COOLANT” in CHAPTER 3.
2. Check:
- Cooling system
  Leaks → Repair or replace any faulty part.

THERMOSTAT

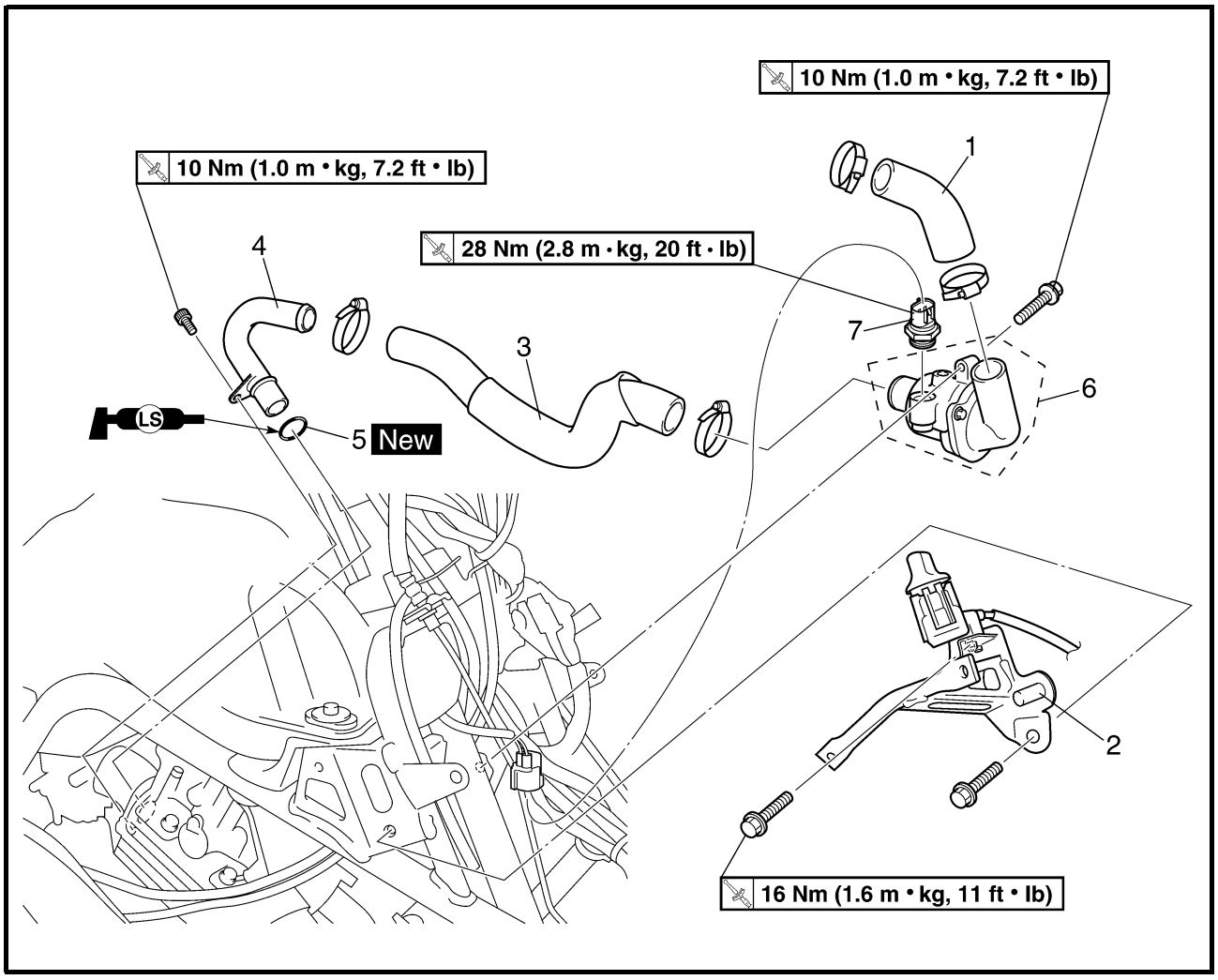

Order	Job name/Part name	Q'ty	Remarks
	Removing the thermostat		Remove the parts in the order below.
	Front panel and front fender		Refer to "SEAT, FENDERS AND FUEL TANK" in CHAPTER 3.
	Coolant		Drain.
	Radiator		Refer to "RADIATOR".
1	Radiator inlet hose	1	
2	Front fender bracket	1	
3	Thermostat inlet hose	1	
4	Water jacket outlet pipe	1	
5	O-ring	1	
6	Thermostat assembly	1	
7	Thermo switch 2	1	
			For installation, reverse the removal procedure.

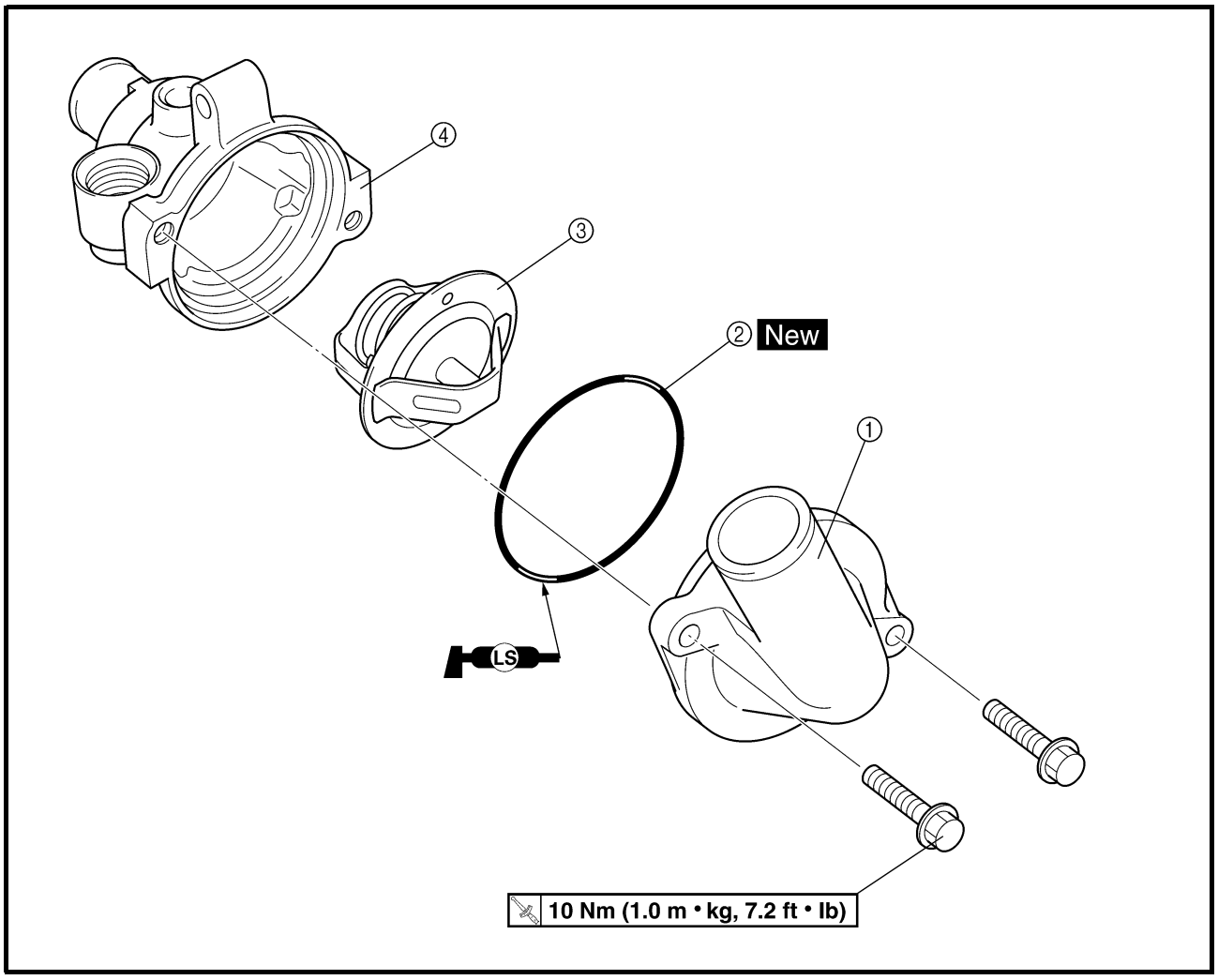

Order	Job name/Part name	Q'ty	Remarks
	Disassembling the thermostat		Remove the parts in the order listed.
①	Thermostat cover	1	
②	O-ring	1	Refer to "ASSEMBLING THE THERMO-STAT".
③	Thermostat	1	
④	Thermostat housing	1	
			For assembly, reverse the disassembly procedure.

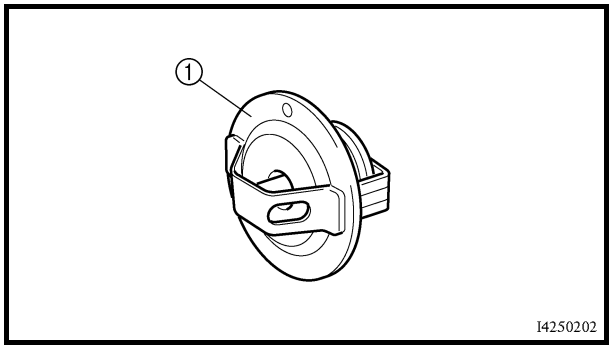

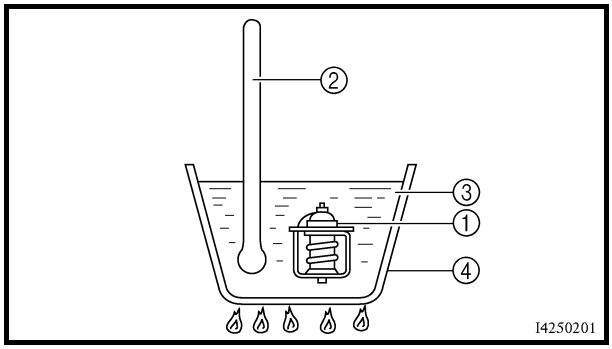

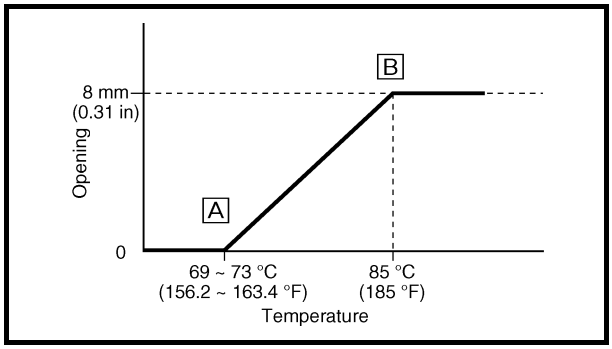

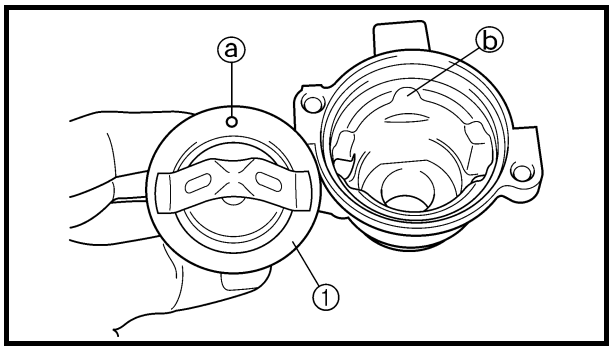

CHECKING THE THERMOSTAT

1.Check:
- Thermostat ①
  Does not open at 69 ~ 73 °C (156.2 ~ 163.4 °F) → Replace.

****

Checking steps:
- Suspend the thermostat in a container filled with water.
- Slowly heat the water.
- Place a thermometer in the water.
- While stirring the water, observe the thermostat and thermometer's indicated temperature.

****

① Thermostat
② Thermometer
③ Water
④ Container
Ⓐ Fully closed
Ⓑ Fully open

NOTE:
If the accuracy of the thermostat is in doubt, replace it. A faulty thermostat could cause serious overheating or overcooling.

2.Check:
- Thermostat housing cover
- Thermostat housing
  Cracks/damage → Replace.

ASSEMBLING THE THERMOSTAT

1.Install:
- Thermostat ①
- Thermostat housing cover

NOTE:
Install the thermostat with its breather hole ⓐ toward the projection ⓑ.

2.Fill:
- Cooling system
  (with the specified amount of the recommended coolant)
  Refer to "CHANGING THE COOLANT" in CHAPTER 3.

3.Check:
- Cooling system
  Leak → Repair or replace any faulty part.

WATER PUMP

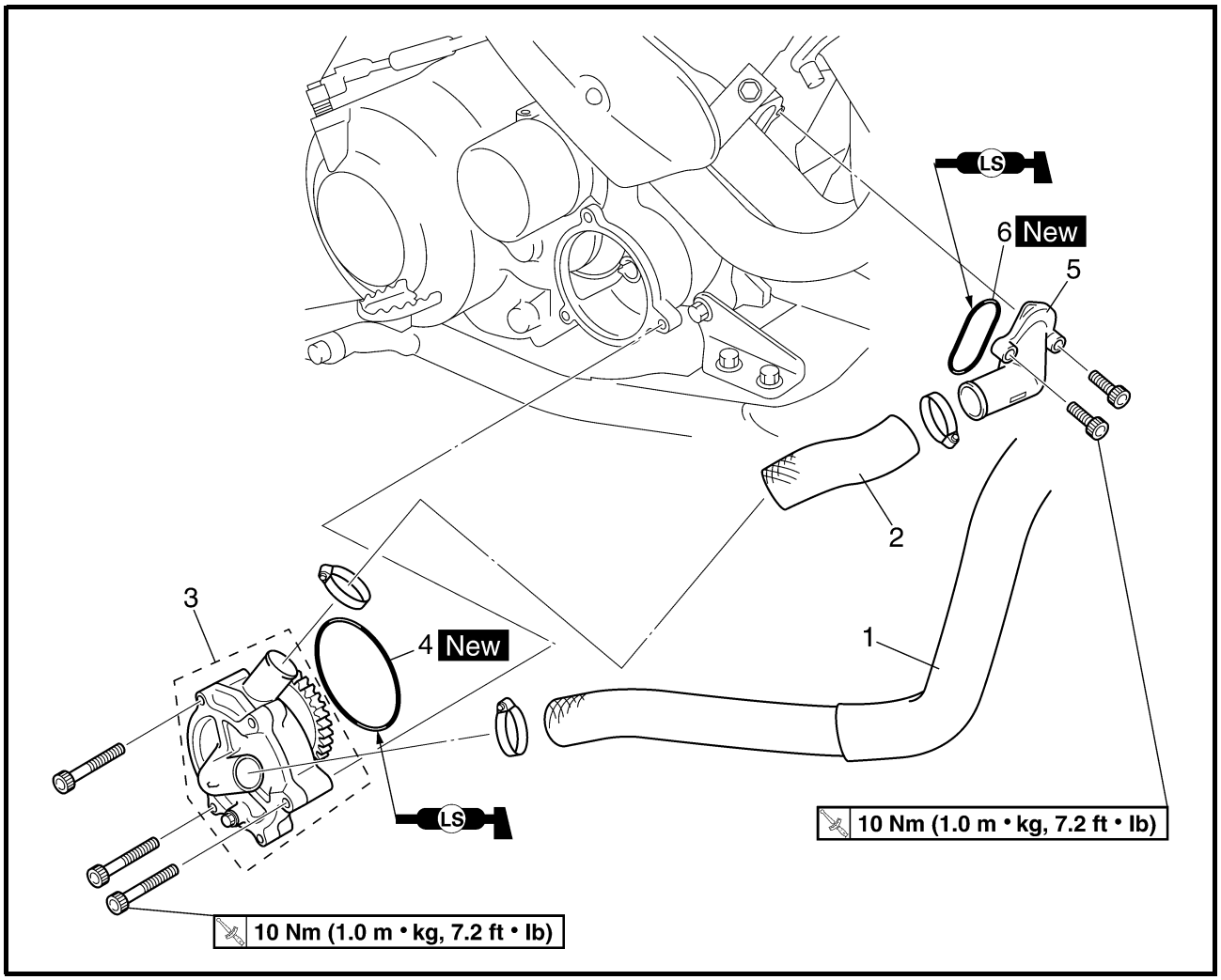

Order	Job name/Part name	Q'ty	Remarks
	Removing the water pump		Remove the parts in the order below.
	Coolant		Drain.
1	Radiator outlet hose	1	Disconnect.
2	Water pump outlet hose	1	
3	Water pump assembly	1	
4	O-ring	1	
5	Water jacket inlet housing	1	
6	O-ring	1	
			For installation, reverse the removal procedure.

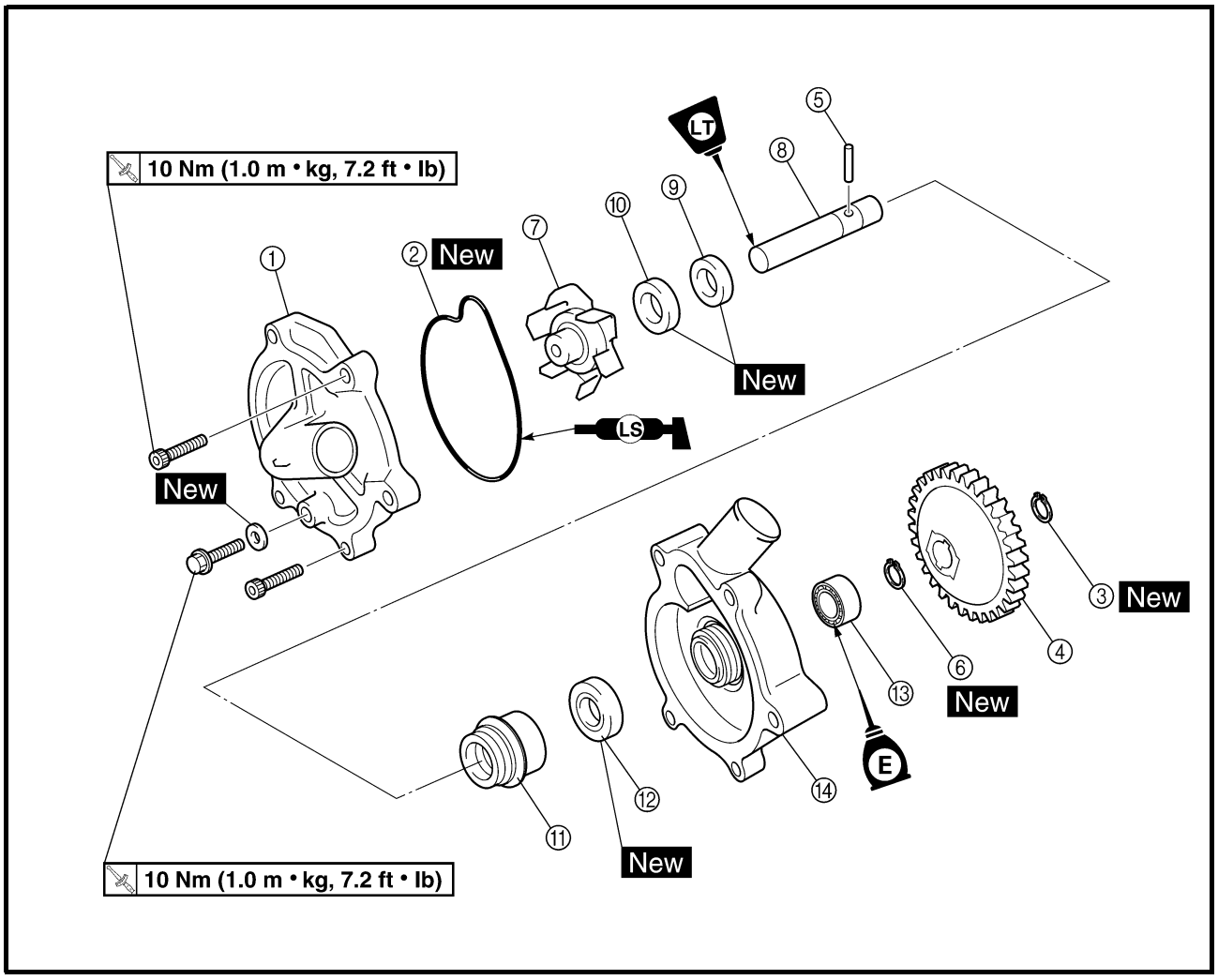

Order	Job name/Part name	Q'ty	Remarks
	Disassembling the water pump		Remove the parts in the order below.
①	Water pump housing cover	1	
②	O-ring	1	
③	Circlip	1	
④	Impeller shaft gear	1	
⑤	Pin	1	
⑥	Circlip	1	
⑦	Impeller	1	Refer to "DISASSEMBLING/ASSEMBLING THE THERMOSTAT".
⑧	Impeller shaft	1	
⑨	Rubber damper holder	1	

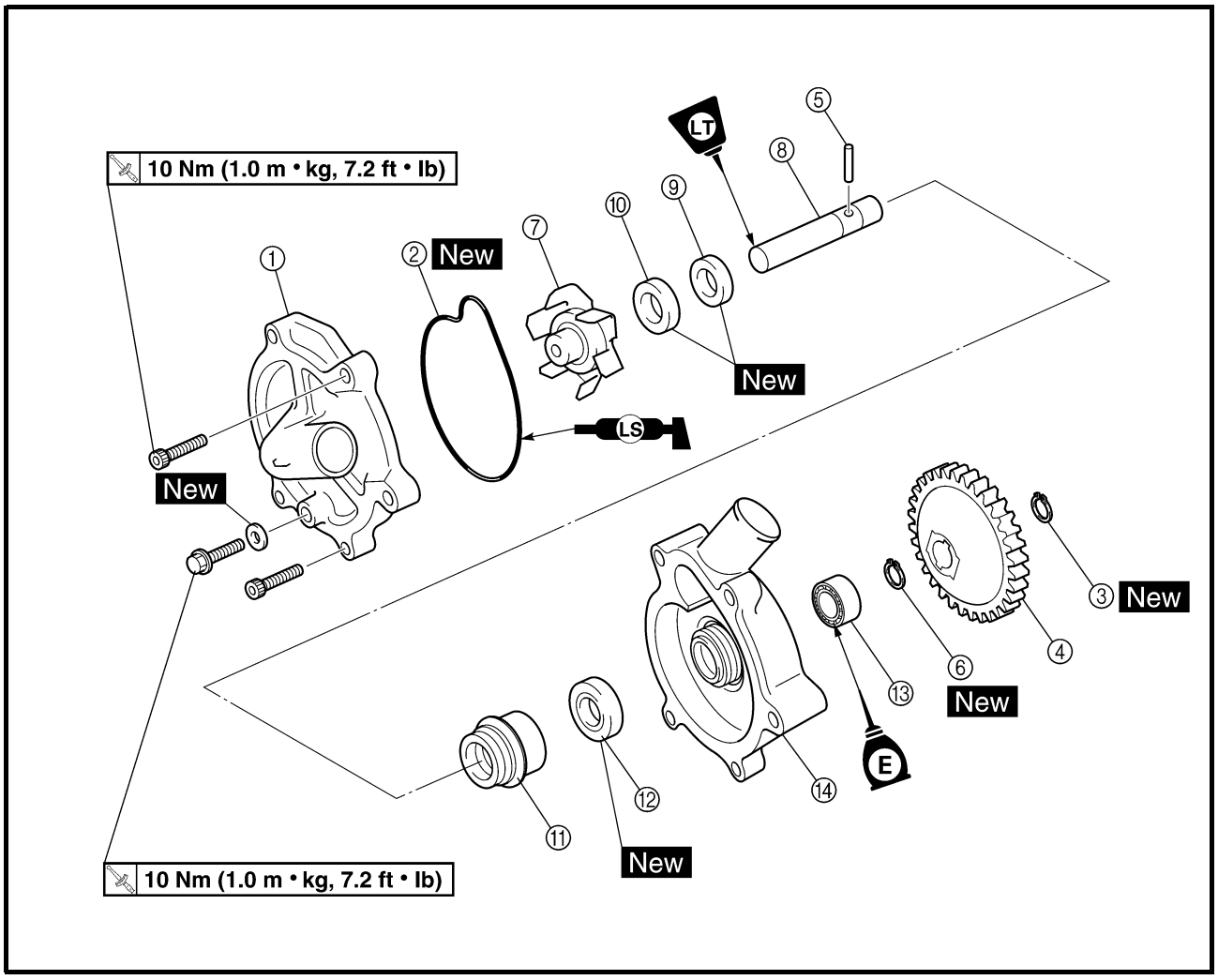

Order	Job name/Part name	Q'ty	Remarks
⑩	Rubber damper	1	Refer to "DISASSEMBLING/ASSEMBLING THE THERMOSTAT".
⑪	Water pump seal	1	
⑫	Oil seal	1	
⑬	Bearing	1	
⑭	Water pump housing	1	
			For assembly, reverse the disassembly procedure.

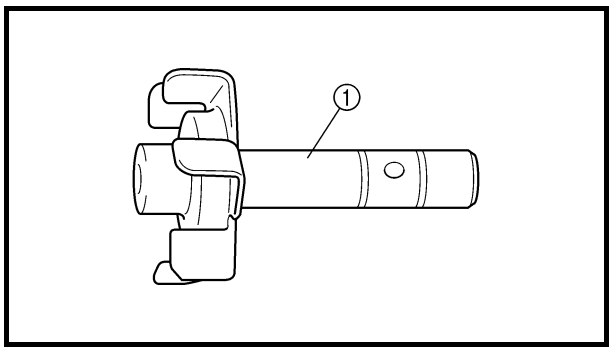

DISASSEMBLING THE WATER PUMP

1.Remove:
- Impeller shaft ①

NOTE:
Tap out the impeller shaft from the impeller.

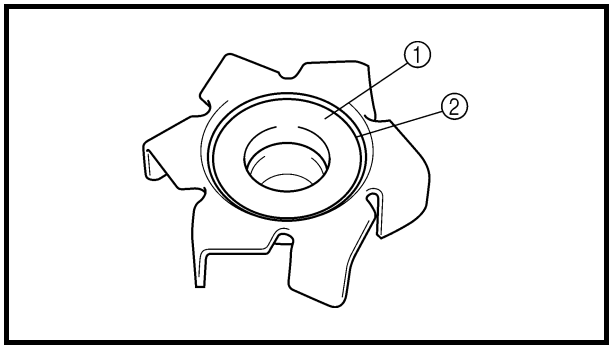

2.Remove:
- Rubber damper holder ①
- Rubber damper ②
  (from the impeller, with a thin, flathead screwdriver)

NOTE:
Do not scratch the impeller.

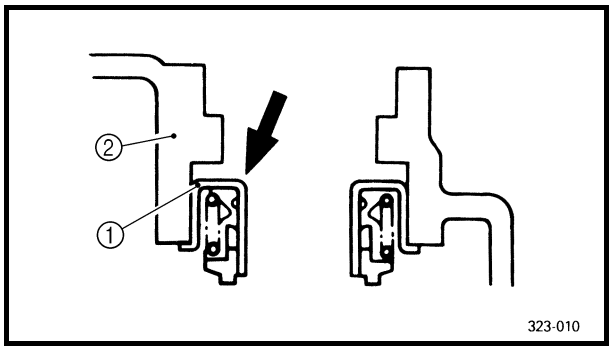

3.Remove:
- Water pump seal ①

NOTE:
Tap out the water pump seal from the inside of the water pump housing.

② Water pump housing

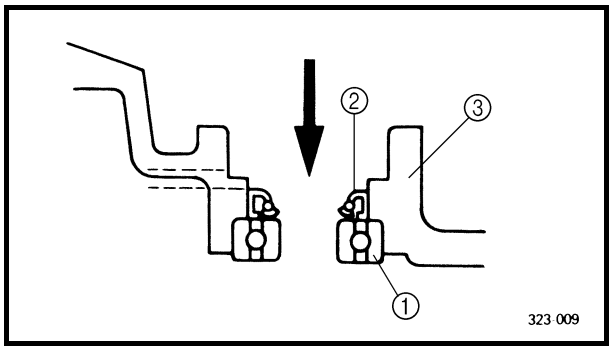

4.Remove:
- Oil seal ①
- Bearing ②

NOTE:
Tap out the bearing and oil seal from the outside of the water pump housing.

③ Water pump housing

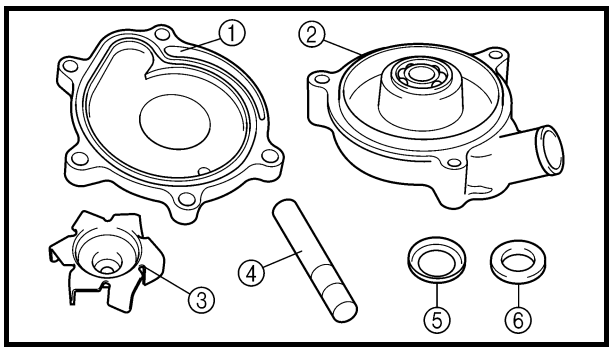

CHECKING THE WATER PUMP

1.Check:
- Water pump housing cover ①
- Water pump housing ②
- Impeller ③
- Impeller shaft ④
- Rubber damper ⑤
- Rubber damper holder ⑥
  Cracks/damage/wear → Replace.

2.Check:
- Water pump seal
- Oil seal New
- Water pump outlet pipe
  Cracks/damage/wear → Replace.
- Bearing
  Rough movement → Replace.

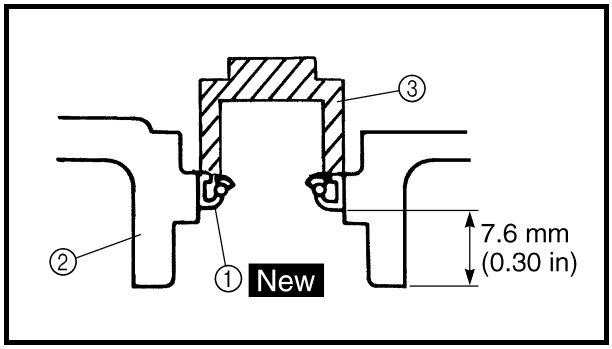

ASSEMBLING THE WATER PUMP

1.Install:
- Oil seal ① New
  (into the water pump housing ②)

NOTE:
- Before installing the oil seal, apply tap water or coolant onto its outer surface.
- Install the oil seal with a socket ③ that matches its outside diameter.

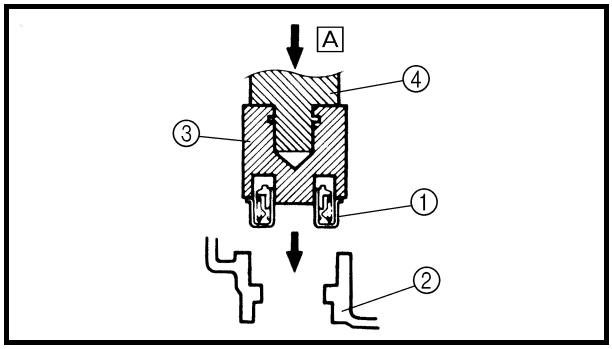

2.Install:
- Water pump seal ① New
  (into the water pump housing ②)

CAUTION:
Never lubricate the water pump seal surface with oil or grease.

NOTE:
Install the water pump seal with the special tools.

Mechanical seal installer ③:
P/N. YM-33221, 90890-04078
Middle driven shaft bearing driver ④:
P/N. YM-04058-1, 90890-04058

A Push down.

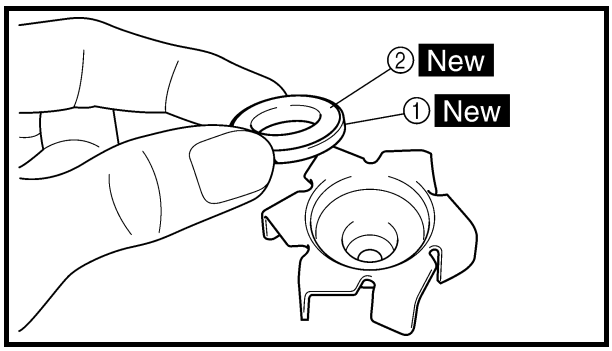

3.Install:
- Rubber damper ① New
- Rubber damper holder ② New

NOTE:
Before installing the rubber damper, apply tap water or coolant onto its outer surface.

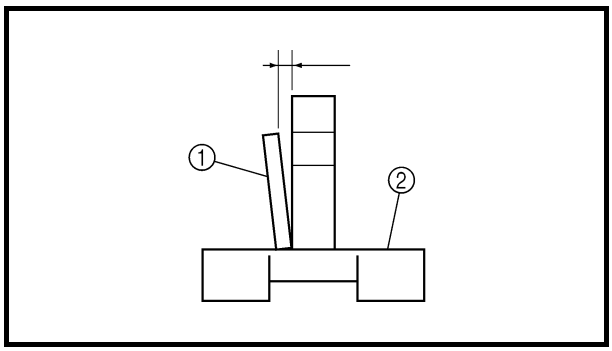

4.Measure:
- Impeller shaft tilt
  Out of specification → Repeat steps (3) and (4).

CAUTION:

Make sure that the rubber damper and rubber damper holder are bottom with the impeller.

	Max. impeller shaft tilt: **0.15 mm (0.006 in)**

① Straightedge
② Impeller

CARB 7

CHAPTER 7.
CARBURETION

CARBURETION

CARBURETORS

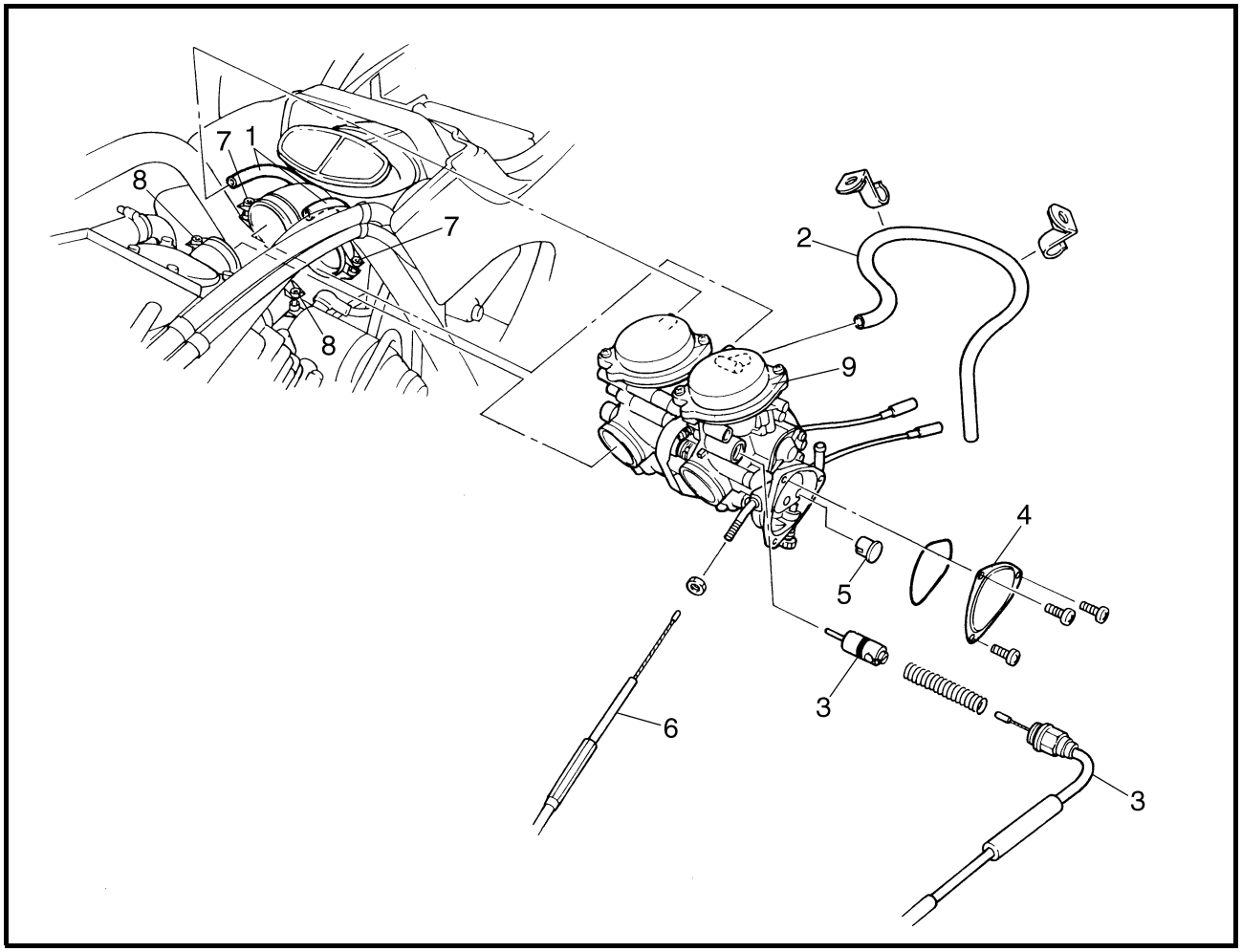

Order	Job name/Part name	Q'ty	Remarks
	Removing the carburetors		Remove the parts in the order below.
	Seat/front fender/fuel tank/rubber cover 2		Refer to "SEAT, FENDERS AND FUEL TANK" in CHAPTER 3.
1	Air vent hose	2	
2	Float chamber breather hose	1	
3	Starter cable/starter plunger	1/1	
4	Throttle valve cover	1	
5	Throttle cable end	1	
6	Throttle cable	1	
7	Clamp screw (air filter case)	2	Loosen.
8	Clamp screw (carburetor joint)	2	Loosen.
9	Carburetors	1	
			For installation, reverse the removal procedure.

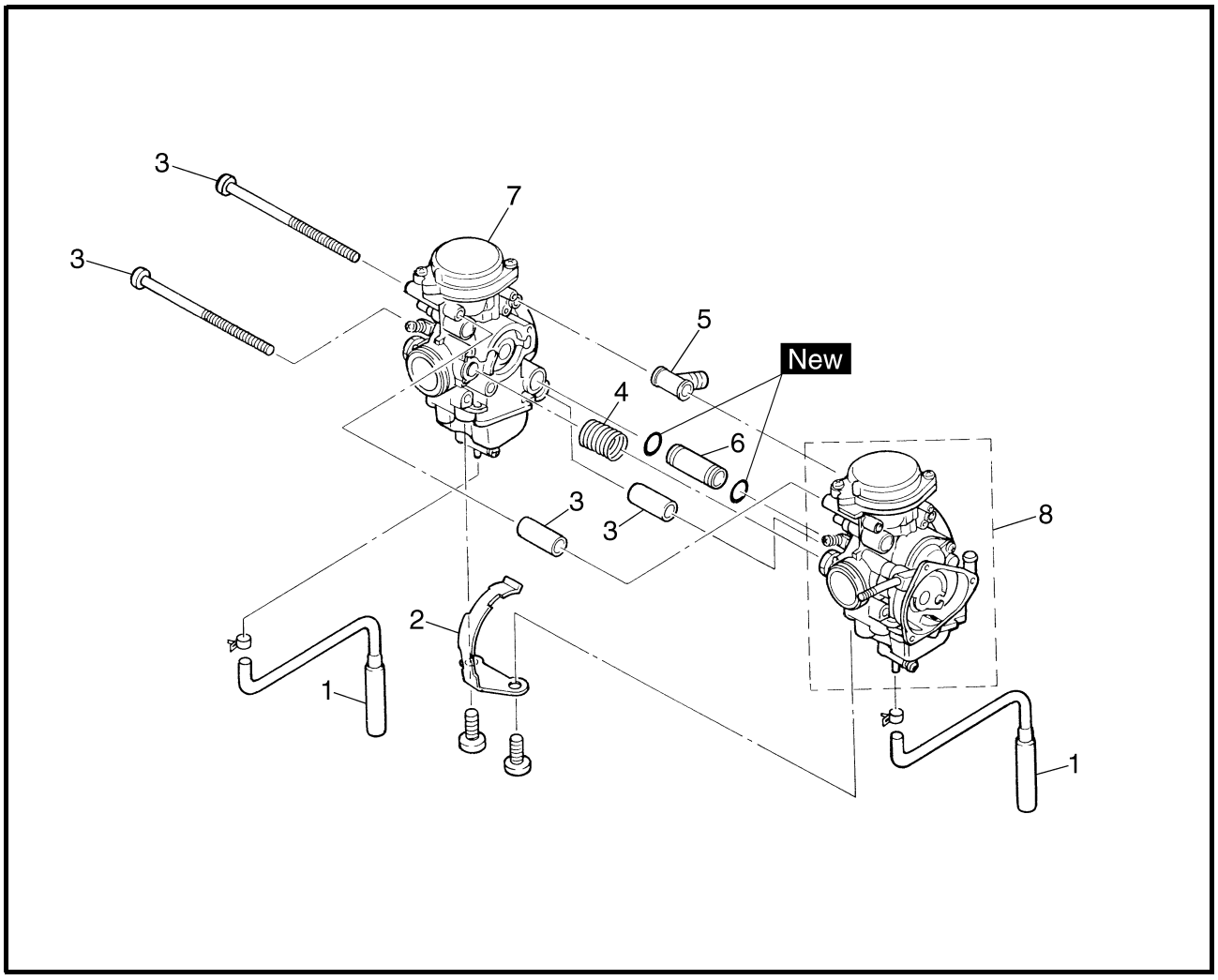

Order	Job name/Part name	Q'ty	Remarks
	Separating the carburetors		Remove the parts in the order below.
1	Drain hose	2	
2	Plate	1	
3	Connecting bolt/spacer	2/2	
4	Spring	1	
5	Hose joint	1	
6	Pipe	1	
7	Carburetor 2	1	
8	Carburetor 1	1	
			For installation, reverse the separating procedure.

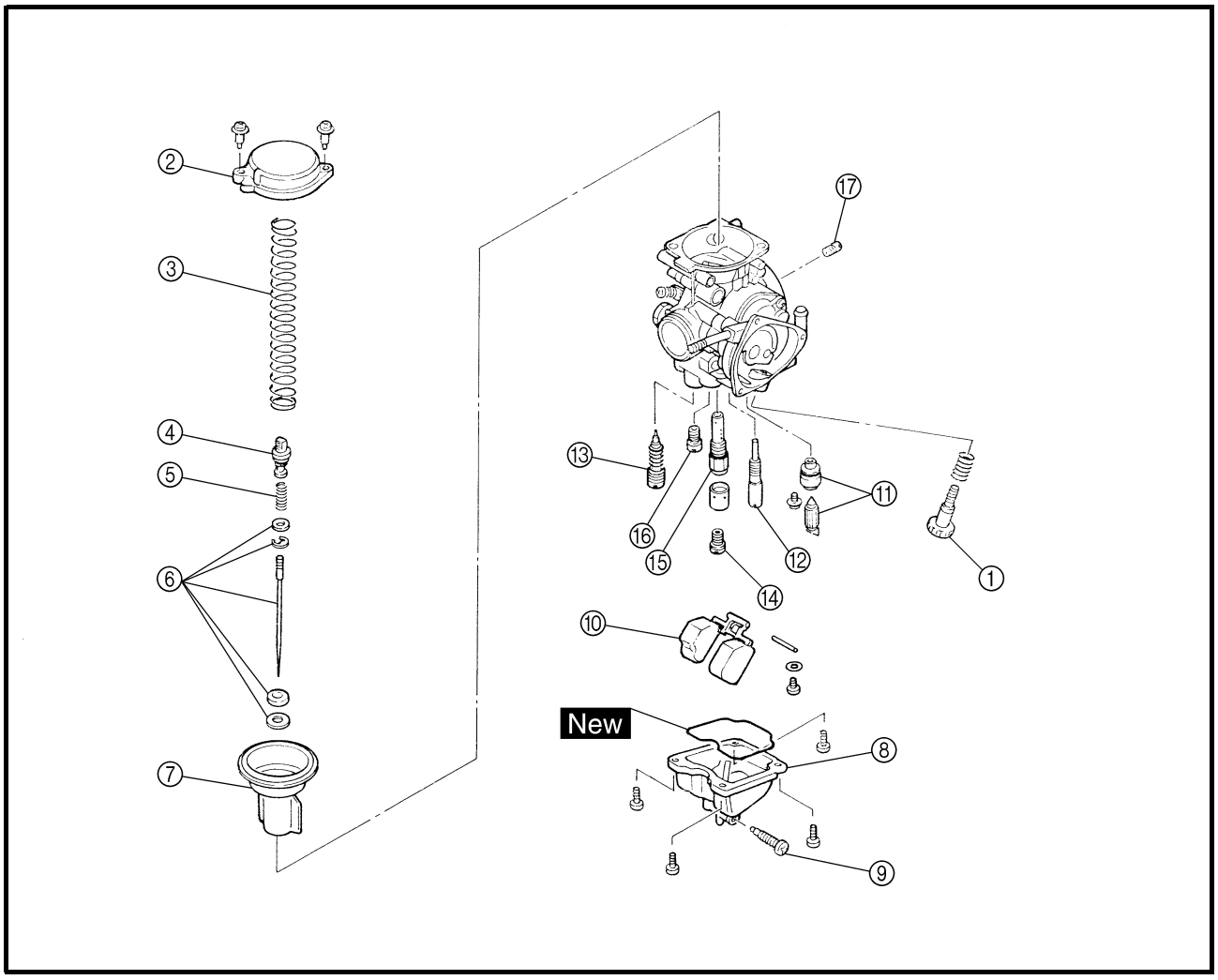

Order	Job name/Part name	Q'ty	Remarks
	Disassembling the carburetor		Remove the parts in the order below.
①	Throttle stop screw	1	
②	Vacuum chamber cover	1	
③	Spring	1	
④	Jet needle holder	1	
⑤	Spring	1	
⑥	Jet needle set	1	
⑦	Piston valve	1	
⑧	Float chamber	1	
⑨	Drain screw	1	
⑩	Float	1	Refer to "ASSEMBLING THE CARBURETOR".
⑪	Needle valve set	1	

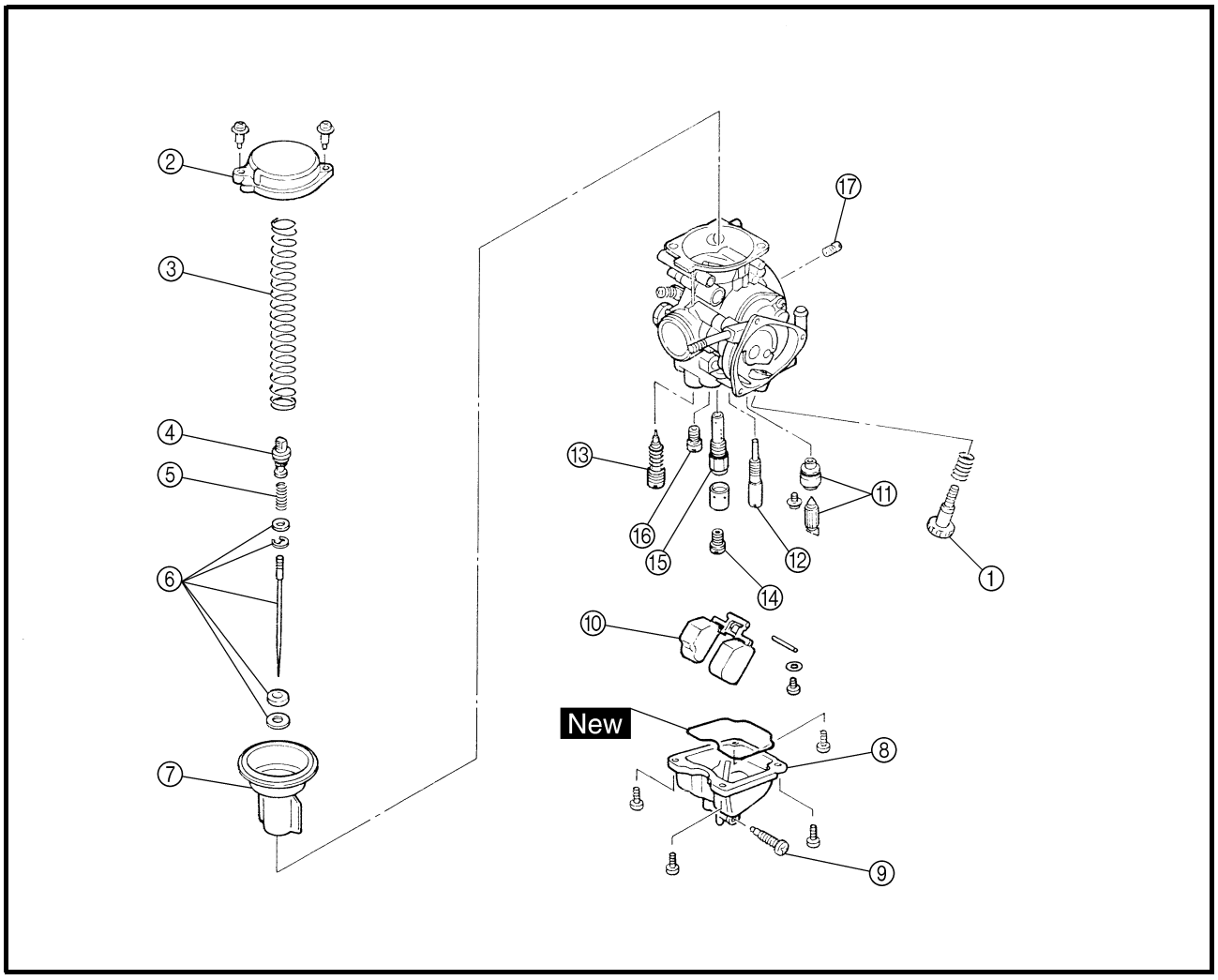

Order	Job name/Part name	Q'ty	Remarks
⑫	Pilot jet	1	
⑬	Pilot screw set	1	Refer to "DISASSEMBLING/ ASSEMBLING THE CARBURETOR".
⑭	Main jet	1	
⑮	Needle jet	1	Refer to "ASSEMBLING THE CARBURETOR".
⑯	Starter jet	1	
⑰	Pilot air jet	1	
			For assembly, reverse the disassembly procedure.

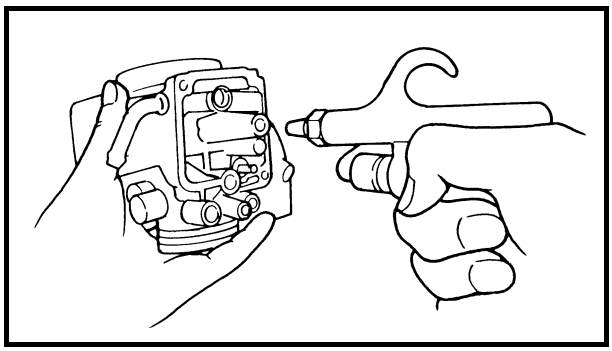

CHECKING THE CARBURETOR

1.Check:
- Carburetor body
- Float chamber
  Cracks/damage → Replace.
- Fuel passage
  Contamination → Clean as indicated.
- Fuel chamber body
  Contamination → Clean.

****

Cleaning steps:
- Wash the carburetor in a petroleum based solvent.
  (Do not use any caustic carburetor cleaning solution.)
- Blow out all of the passages and jets with compressed air.

****

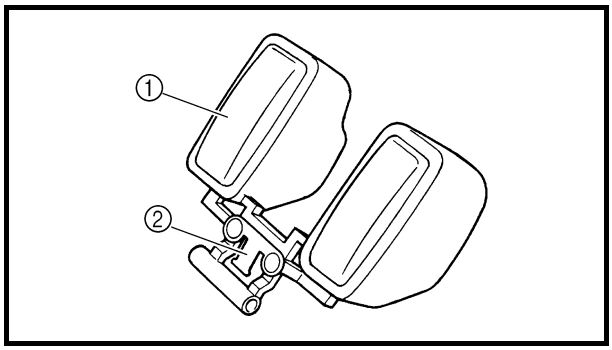

2.Check:
- Float ①
- Float tang ②
  Damage → Replace.

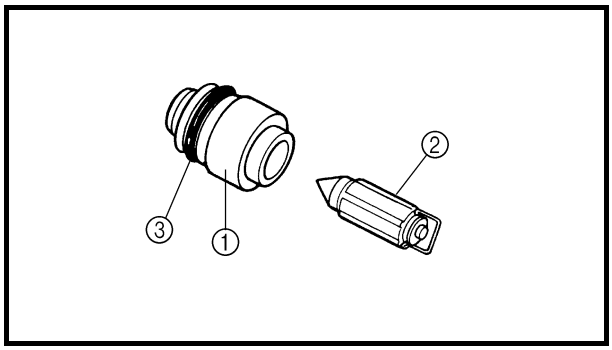

3.Check:
- Valve seat ①
- Needle valve ②
- O-ring ③
  Contamination/wear/damage → Replace as a set.

NOTE:
Always replace the needle valve and valve seat as a set.

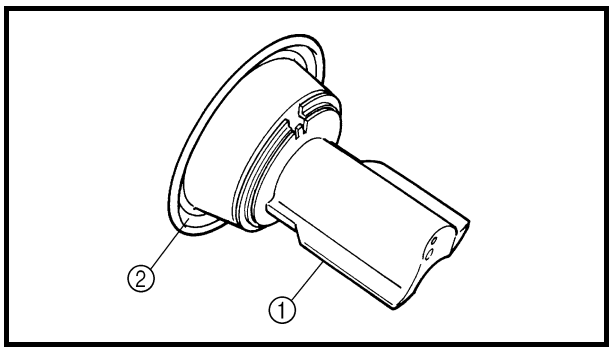

4.Check:
- Piston valve ①
  Scratches/wear/damage → Replace.
- Rubber diaphragm ②
  Tears → Replace.

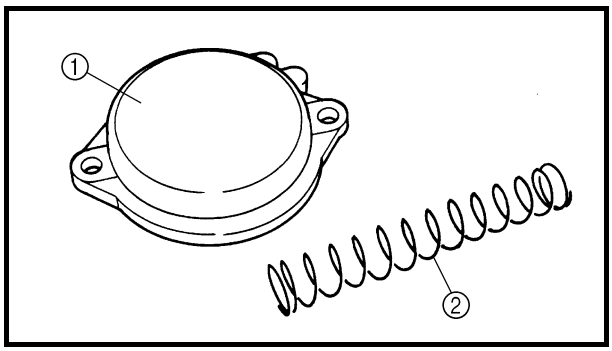

5.Check:
- Vacuum chamber cover ①
- Spring ②
  Cracks/damage → Replace.

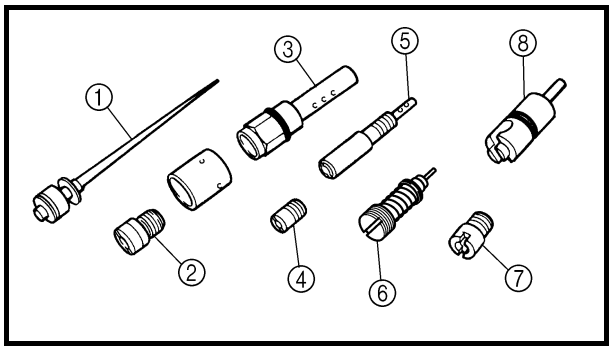

6.Check:
- Jet needle ①
- Main jet ②
- Needle jet ③
- Pilot air jet ④
- Pilot jet ⑤
- Pilot screw ⑥
- Starter jet ⑦
- Starter plunger ⑧
  Bends/wear/damage → Replace.
- Blockage → Blow out the jets with compressed air.

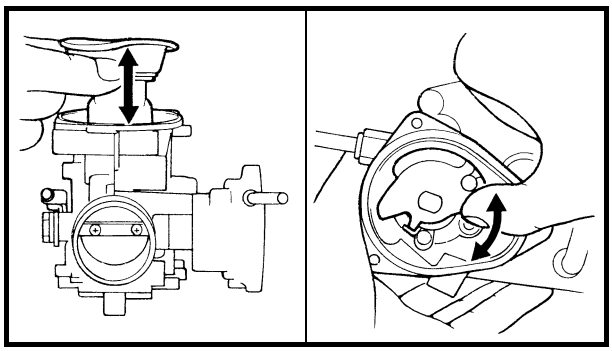

7.Check:
- Free movement (piston valve)
  Sticks → Replace the piston valve guide and the piston valve.
  Insert the piston valve into the carburetor body, and check for free movement.

8.Check:
- Free movement (throttle valve)
  Sticks → Replace.

ASSEMBLING THE CARBURETOR

CAUTION:

Before reassembling, wash all of the parts in a clean petroleum based solvent.

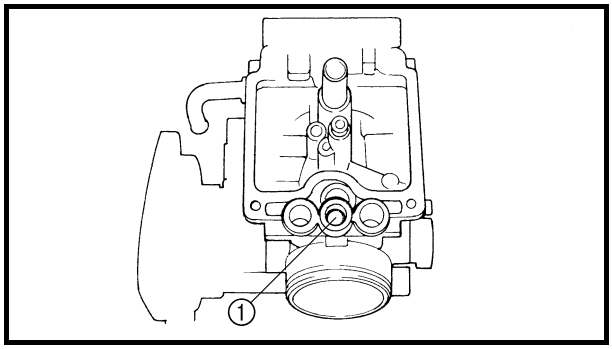

1.Install:
- Pilot screw ①

Pilot screw setting:
Carburetor #1 : 2-1/2
Carburetor #2 : 1-1/1

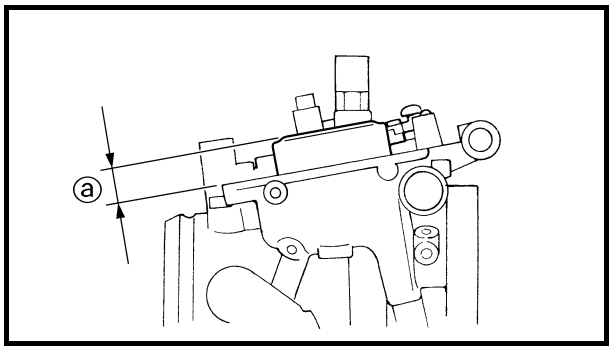

2.Measure:
- Float height ⓐ
  Out of specification → Adjust.

Float height (F.H.):
13 mm (0.51 in)

****

Measurement and adjustment steps:
- Hold the carburetor in an upside down position.
- Measure the distance from the front mating surface of the float chamber (gasket removed) to the top of the float.

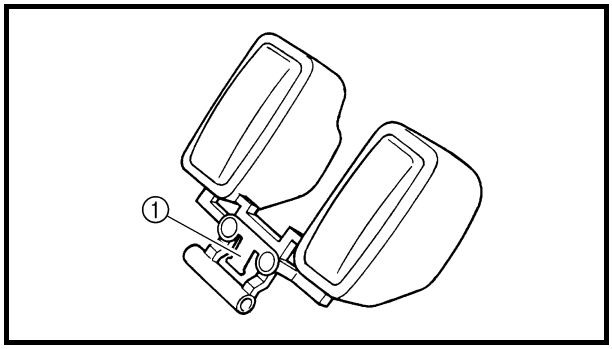

NOTE:
The float arm should be resting on the needle valve, but not compressing it.

- If the float height is not within the specification, inspect the valve seat and needle valve.
- If either is worn, replace them both.
- If both are fine, adjust the float height by bending the float tang ① on the float.
- Recheck the float height.

****

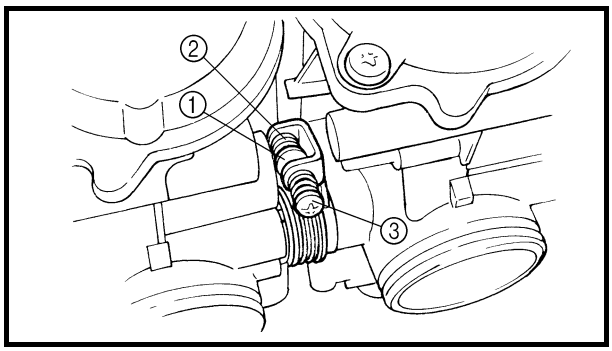

3.Install:
- Carburetor 1
- Carburetor 2
- Pipe
- Hose joint
- Spring

NOTE:
- Install the throttle valve lever ① onto carburetor 2 between the spring ② and synchronizing screw ③.
- Make sure the throttle valves operate smoothly and that the synchronization is correct.

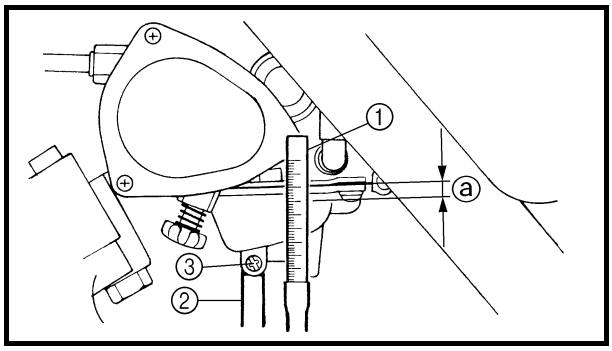

ADJUSTING THE FUEL LEVEL

1.Measure:
- Fuel level ⓐ
  Out of specification → Adjust.

Fuel level:
3 ~ 4 mm (0.12 ~ 0.16 in)
Below the float chamber mating surface

****

Fuel level measurement and adjustment steps:
- Place the machine on a level surface.
- Connect the fuel level gauge ① to the drain pipe ②.

Fuel level gauge:
P/N. YM-01312-A, 90890-01312

- Loosen the drain screw ③.
- Hold the gauge vertically next to the float chamber line.
- Measure the fuel level ⓐ with the gauge.
- If the fuel level is incorrect, adjust the fuel level.

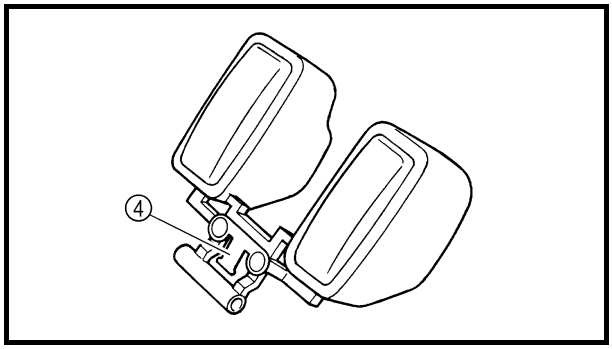

- Remove the carburetor.
- Inspect the valve seat and needle valve.
- If either is worn, replace them both.
- If both are fine, adjust the float level by bending the float tang ④ slightly.
- Install the carburetor.
- Recheck the fuel level.

****

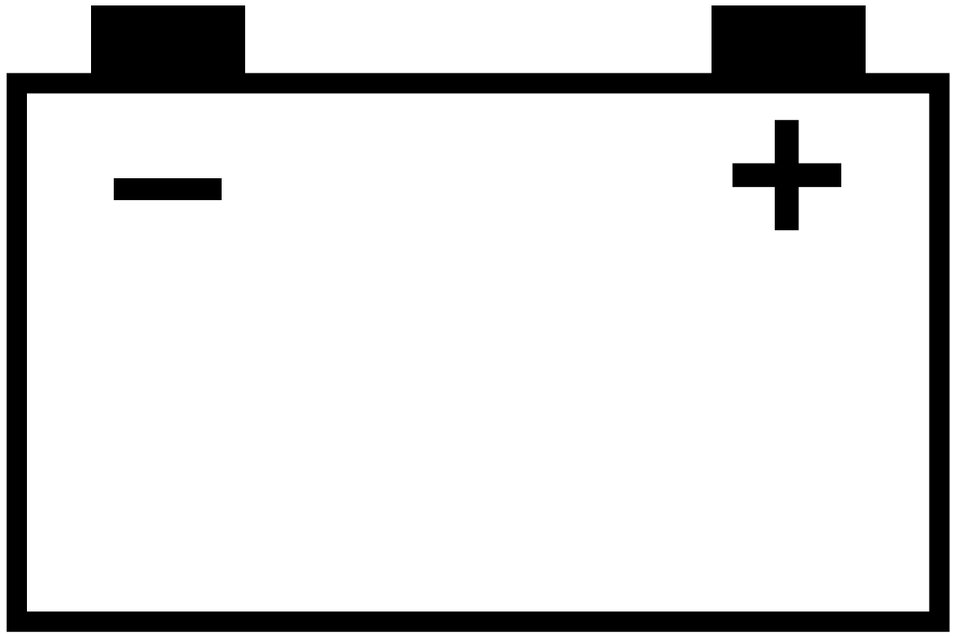

ELEC 8

CHAPTER 8.
ELECTRICAL

EB800000

ELECTRICAL

ELECTRICAL COMPONENTS

① Main switch
② Front brake switch
③ Indicator light
④ Circuit breaker (fan)
⑤ Park switch
⑥ Clutch switch
⑦ Handlebar switch (left)
⑧ Fuse
⑨ Starter relay
⑩ Tail/brake light
⑪ Rectifier/regulator
⑫ CDI unit
⑬ Battery
⑭ Neutral switch
⑮ Reverse switch
⑯ Speed sensor
⑰ Rear brake switch
⑱ Ignition coil
⑲ Headlight
⑳ Thermo switch 1
㉑ Fan
㉒ Thermo switch 2
㉓ Diode

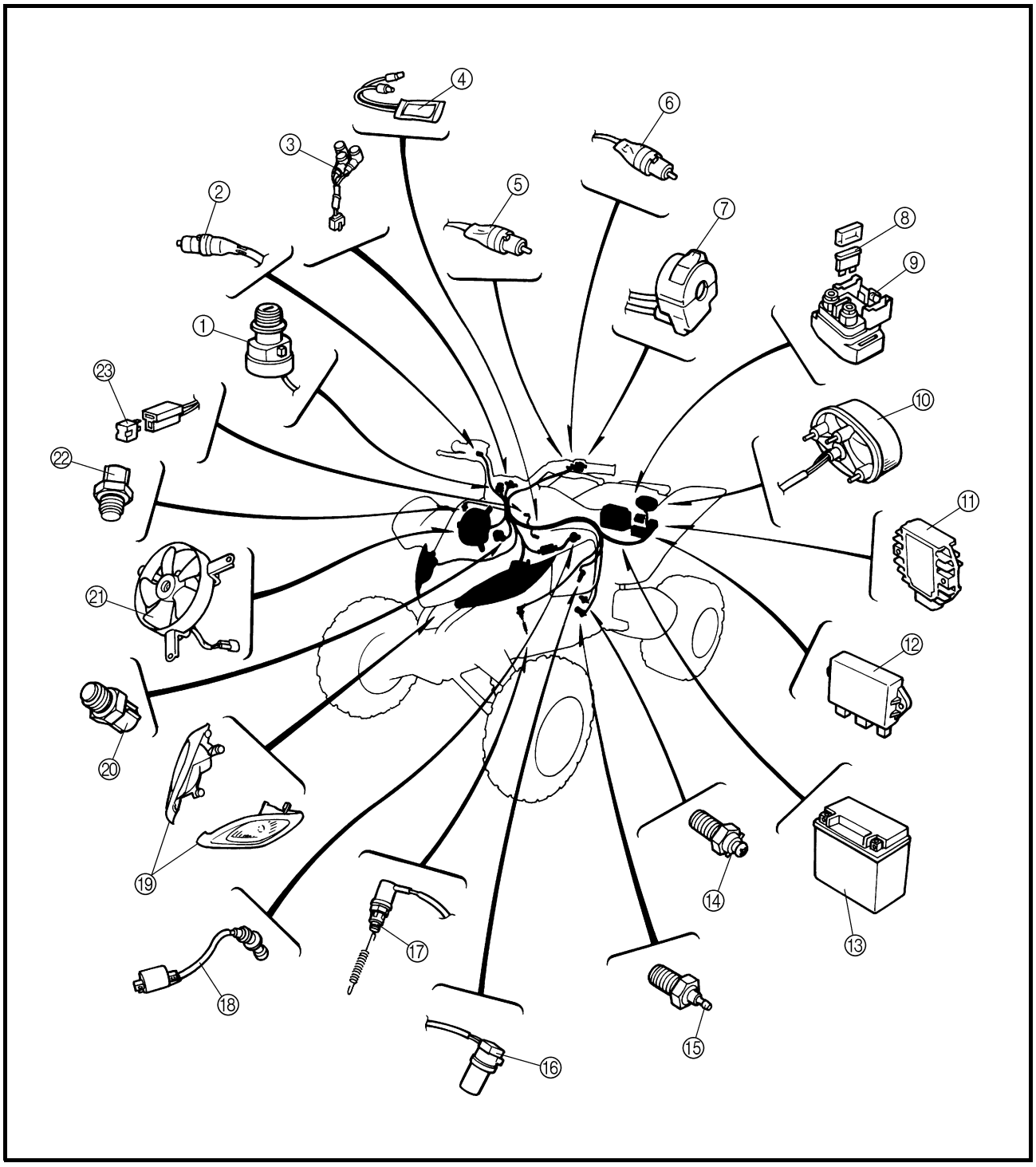

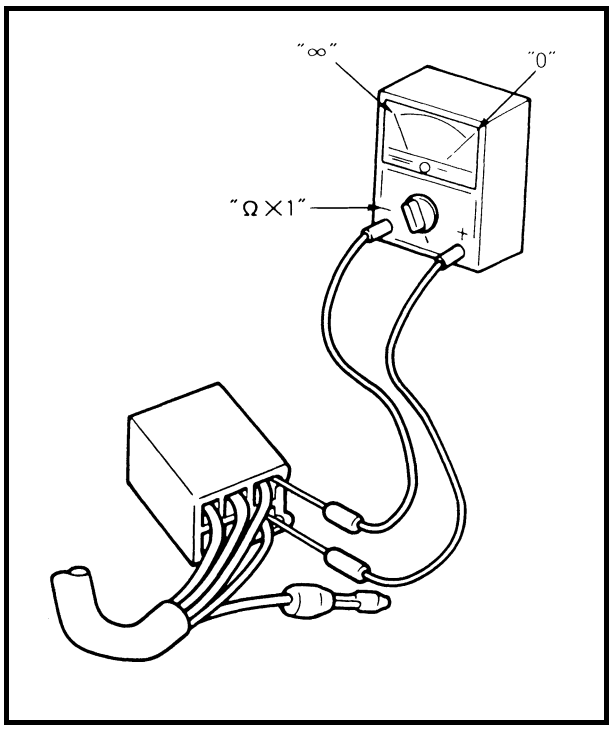

CHECKING THE SWITCH

CHECKING THE SWITCH

Use a pocket tester to check the terminals for continuity. If the continuity is faulty at any point, replace the switch.

	Pocket tester: **P/N. YU-03112, 90890-03112**

NOTE:

- Set the pocket tester to "0" before starting the test.
- The pocket tester should be set to the "Ω × 1" range when testing the switch for continuity.
- Turn the switch on and off a few times when checking it.

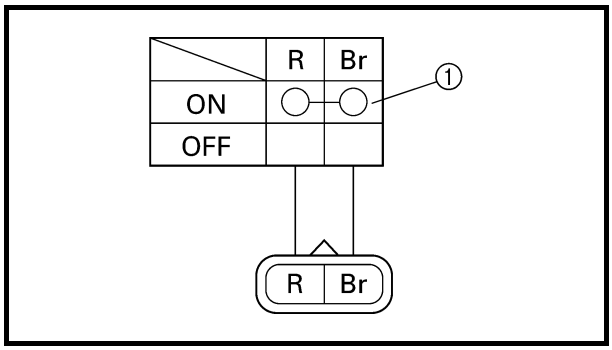

CHECKING A SWITCH SHOWN IN THE MANUAL

The terminal connections for switches (main switch, handlebar switch, engine stop switch, light switch, etc.) are shown in a chart similar to the one on the left.

This chart shows the switch positions in the column and the switch lead colors in the top row.

For each switch position, "○——○" indicates the terminals with continuity.

The example chart shows that:

① There is continuity between the "Red and Brown" leads when the switch is set to "ON".

CHECKING THE SWITCH CONTINUITY

Refer to “CHECKING THE SWITCH” and check for continuity between lead terminals.
Poor connection, no continuity → Correct or replace.
∗ The coupler locations are circled.

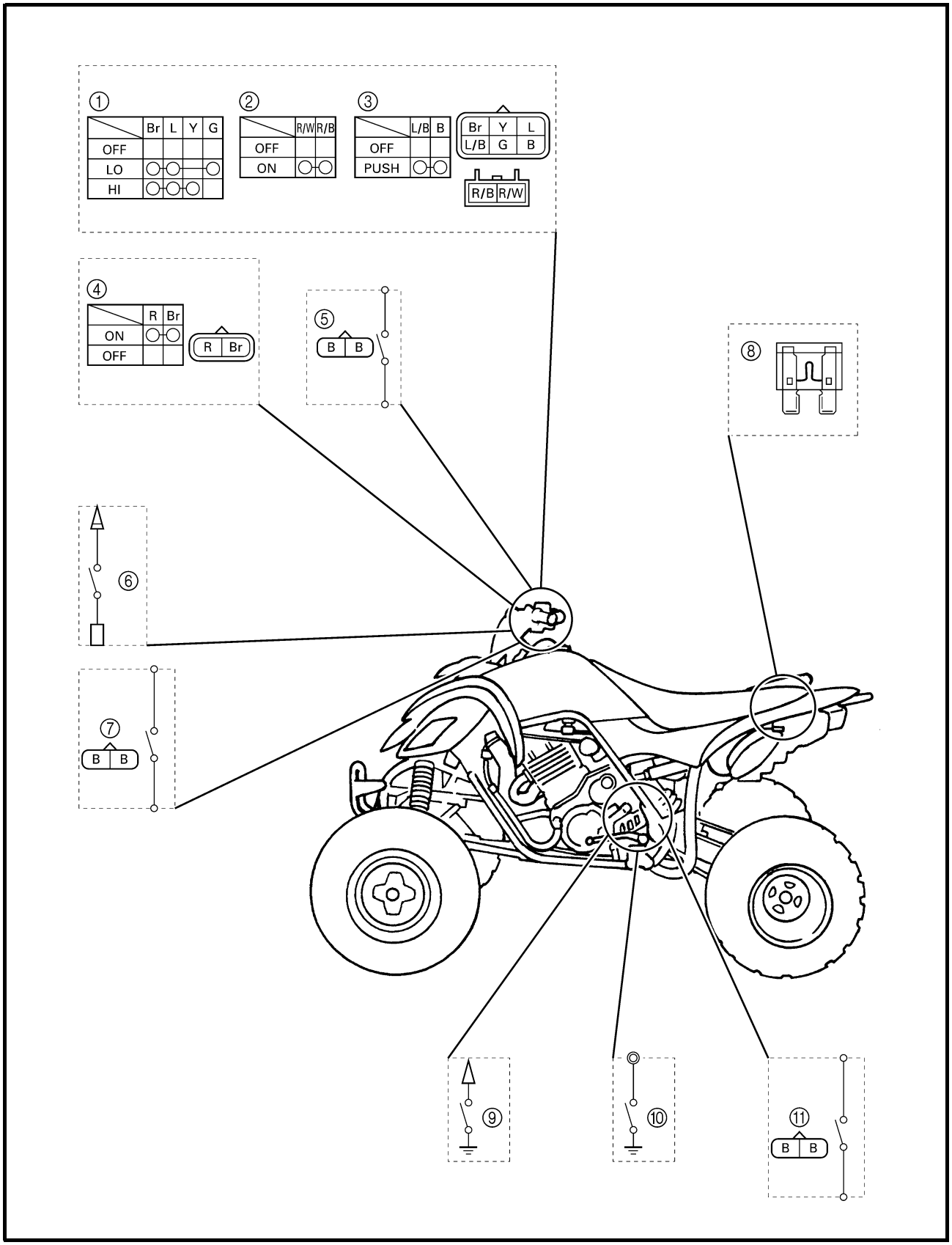

① Lights switch
② Engine stop switch
③ Start switch
④ Main switch
⑤ Front brake switch
⑥ Clutch switch
⑦ Park switch
⑧ Fuse
⑨ Reverse switch
⑩ Neutral switch
⑪ Rear brake switch

EB802000

IGNITION SYSTEM

CIRCUIT DIAGRAM

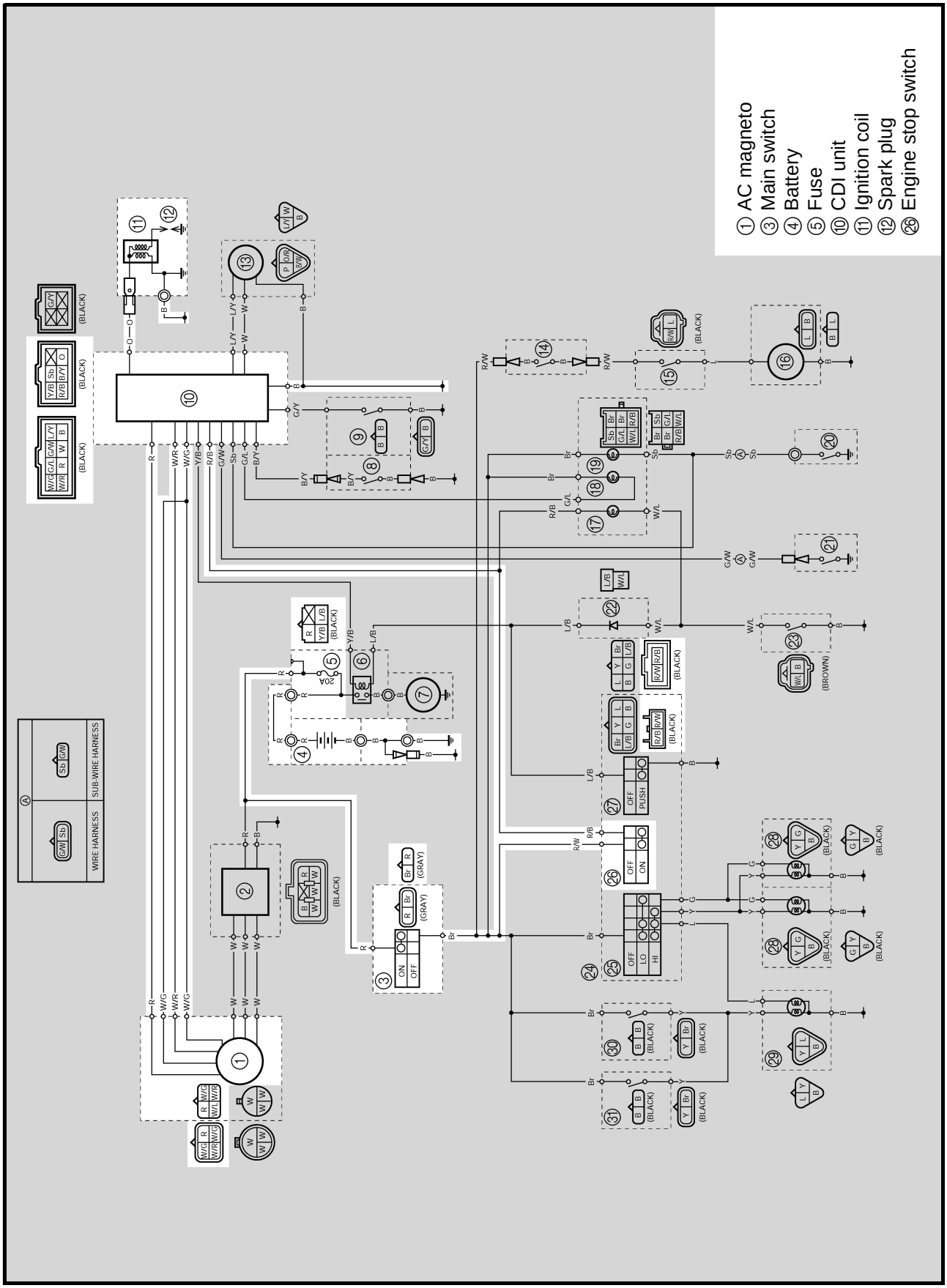

EB802010
TROUBLESHOOTING

IF THE IGNITION SYSTEM FAILS TO OPERATE (NO SPARK OR INTERMITTENT SPARK):

Procedure
Check:
1. Fuse
2. Battery
3. Spark plug
4. Ignition spark gap
5. Spark plug cap resistance
6. Ignition coil resistance
7. Engine stop switch
8. Main switch
9. Pickup coil resistance
10. Charging/rotor rotation direction detection coil resistance
11. Wiring connection (the entire ignition system)

NOTE:
- Remove the following part(s) before troubleshooting:
  1) Seat
  2) Front fender
- Use the following special tool(s) for troubleshooting.

Dynamic spark tester:
P/N. YM-34487
Ignition checker:
P/N. 90890-06754
Pocket tester:
P/N. YU-03112, 90890-03112

EB802011
1. Fuse
Refer to "CHECKING THE SWITCH".

NO CONTINUITY → Replace the fuse.

CONTINUITY ↓

EB802012
2. Battery
- Check the battery condition.
  Refer to "CHECKING THE BATTERY" in CHAPTER 3.

Open-circuit voltage:
12.8 V or more at 20 °C (68 °F)

INCORRECT →
- Clean the battery terminals.
- Recharge or replace the battery.

CORRECT ↓

3. Spark plug
- Check the spark plug condition.
- Check the spark plug type.
- Check the spark plug gap.
  Refer to "CHECKING THE SPARK PLUG" in CHAPTER 3.

Standard spark plug:
DPR8EA-9/NGK

Spark plug gap:
0.8 ~ 0.9 mm (0.031 ~ 0.035 in)

INCORRECT

Repair or replace the spark plug.

CORRECT

For USA and CDN

4.Ignition spark gap

- Disconnect the spark plug cap from the spark plug.
- Connect the dynamic spark tester ① as shown.

② Spark plug cap
③ Spark plug

- Turn the main switch to “ON”.
- Check the ignition spark gap.
- Crank the engine by pushing the starter switch, and increase the spark gap until a misfiring occurs.

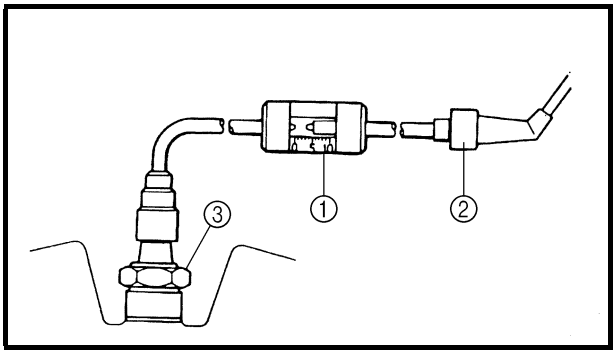

Minimum spark gap:
6.0 mm (0.24 in)

MEETS SPECIFICATION

The ignition system is not faulty.

For Europe

4.Ignition spark gap

- Disconnect the spark plug cap from the spark plug.
- Connect the ignition checker ① as shown.

② Spark plug cap

- Turn the main switch to “ON”.
- Check the ignition spark gap ⓐ.
- Crank the engine by pushing the starter switch, and increase the spark gap until a misfiring occurs.

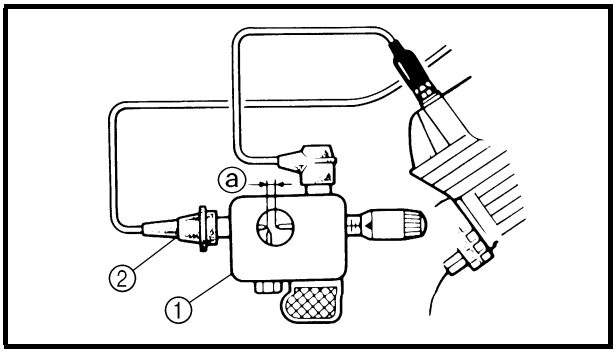

Minimum spark gap:
6.0 mm (0.24 in)

MEETS SPECIFICATION

The ignition system is not faulty.

OUT OF SPECIFICATION OR NO SPARK
*

*

5.Spark plug cap resistance

- Remove the spark plug cap.
- Connect the pocket tester (Ω × 1k) to the spark plug cap.

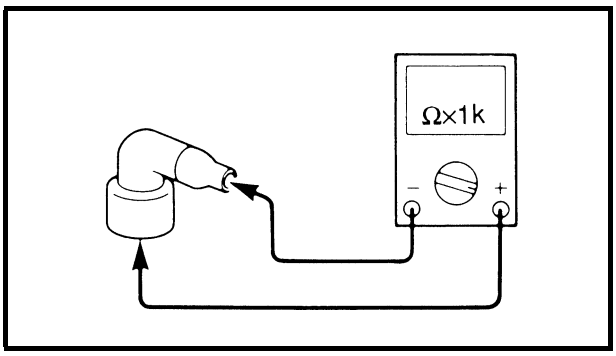

- Check that the spark plug cap has the specified resistance.

Spark plug cap resistance:
10 kΩ at 20 °C (68 °F)

OUT OF SPECIFICATION

Replace the spark plug cap.

MEETS SPECIFICATION

6.Ignition coil resistance

- Disconnect the ignition coil connector from the wire harness.
- Connect the pocket tester (Ω × 1) to the ignition coil.

Tester (+) lead → Orange lead terminal
Tester (–) lead → Ignition coil base

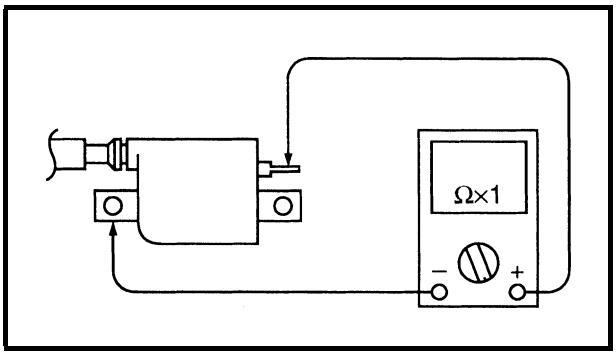

- Check that the primary coil has the specified resistance.

Primary coil resistance:
0.18 ~ 0.28 Ω at 20 °C (68 °F)

- Connect the pocket tester (Ω × 1k) to the ignition coil.

Tester (+) lead → Orange lead terminal
Tester (–) lead → Spark plug lead

- Check that the secondary coil has the specified resistance.

Secondary coil resistance:
6.32 ~ 9.48 kΩ at 20 °C (68 °F)

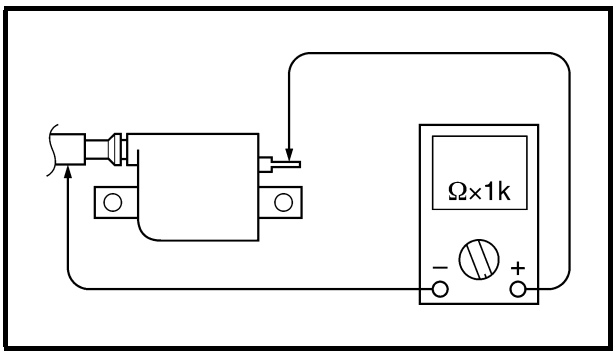

BOTH MEET SPECIFICATION

Replace the ignition coil.

7.Engine stop switch

Refer to “CHECKING THE SWITCH”.

INCORRECT

Replace the handlebar switch (left).

CORRECT

8.Main switch

Refer to “CHECKING THE SWITCH”.

INCORRECT

Replace the main switch.

CORRECT

9.Pickup coil resistance

- Disconnect the AC magneto coupler from the wire harness.
- Connect the pocket tester (Ω × 100) to the pickup coil terminal.

Tester (+) lead → White/Red terminal ①
Tester (–) lead → White/Green terminal ②

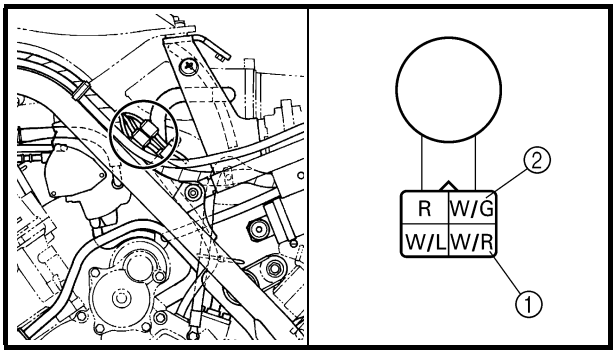

- Check the pickup coil for the specified resistance.

Pickup coil resistance:
445 ~ 545 Ω at 20 °C (68 °F)
(White/Red – White/Green)

OUT OF SPECIFICATION

Replace the pickup coil/starter assembly.

MEETS SPECIFICATION

*

*

10.Charging/rotor rotation direction detection coil resistance

- Disconnect the AC magneto coupler from the wire harness.
- Connect the pocket tester (Ω × 100) to the charging/rotor rotation direction detection coil terminal.

Tester (+) lead → Red terminal ①
Tester (–) lead → White/Blue terminal ②

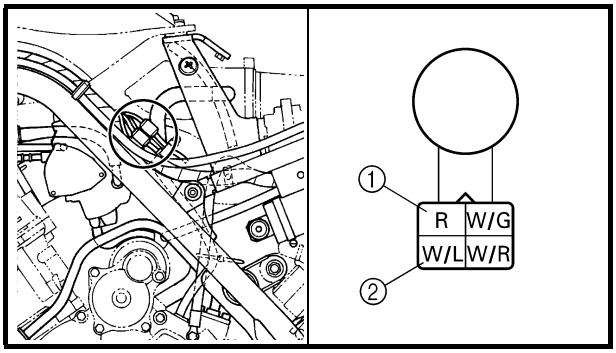

- Check the charging/rotor rotation direction detection coil for the specified resistance.

Rotor rotation direction detection coil resistance:
0.069 ~ 0.085 Ω at 20 °C (68 °F)
(Red – White/Blue)

OUT OF SPECIFICATION

Replace the pickup coil/stator assembly.

MEETS SPECIFICATION

11.Wiring connection

- Check the connections of the entire ignition system.
  Refer to “CIRCUIT DIAGRAM”.

POOR CONNECTION

Properly connect the ignition system.

CORRECT

Replace the CDI unit.

EB803000

ELECTRIC STARTING SYSTEM

CIRCUIT DIAGRAM

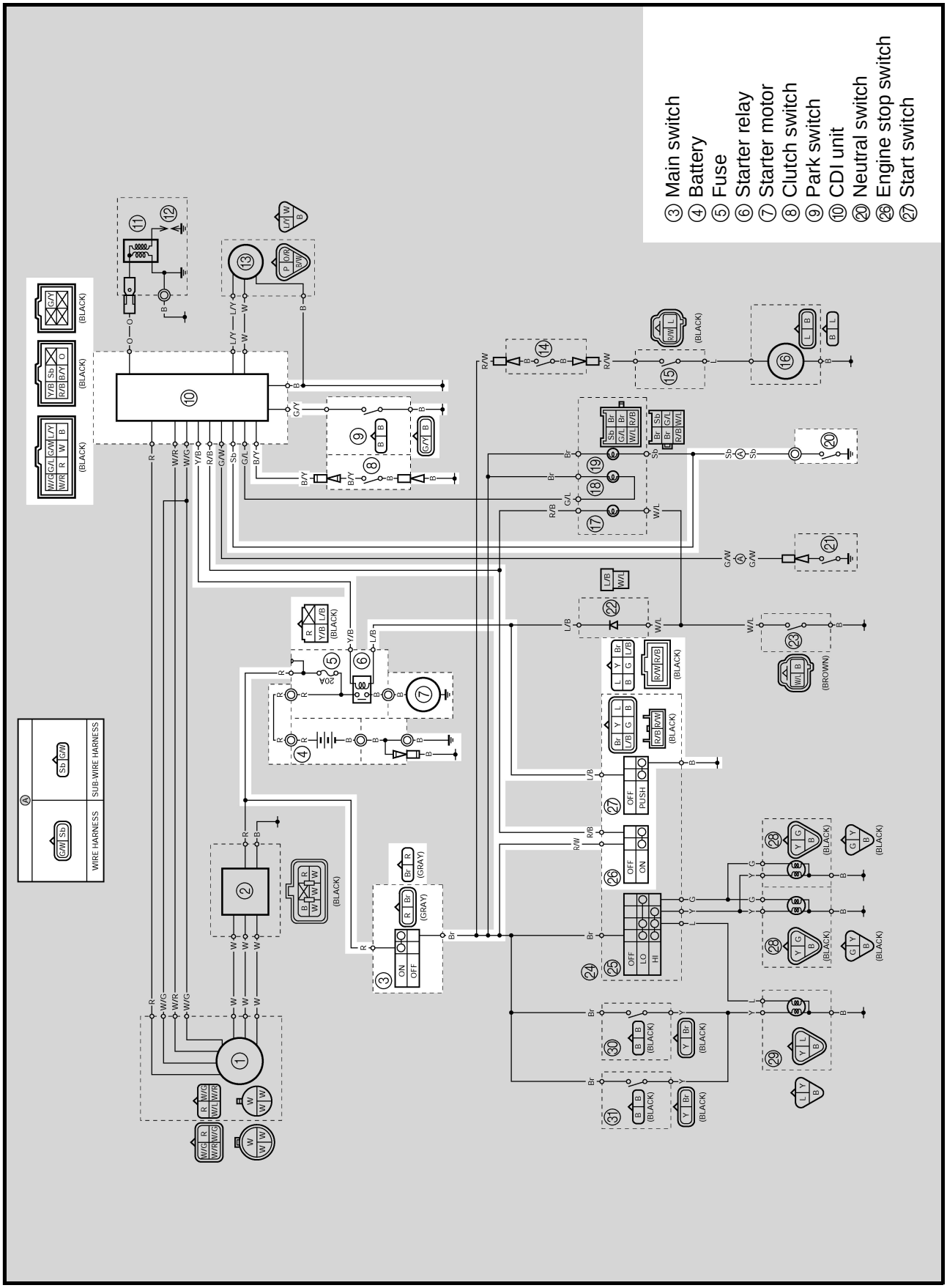

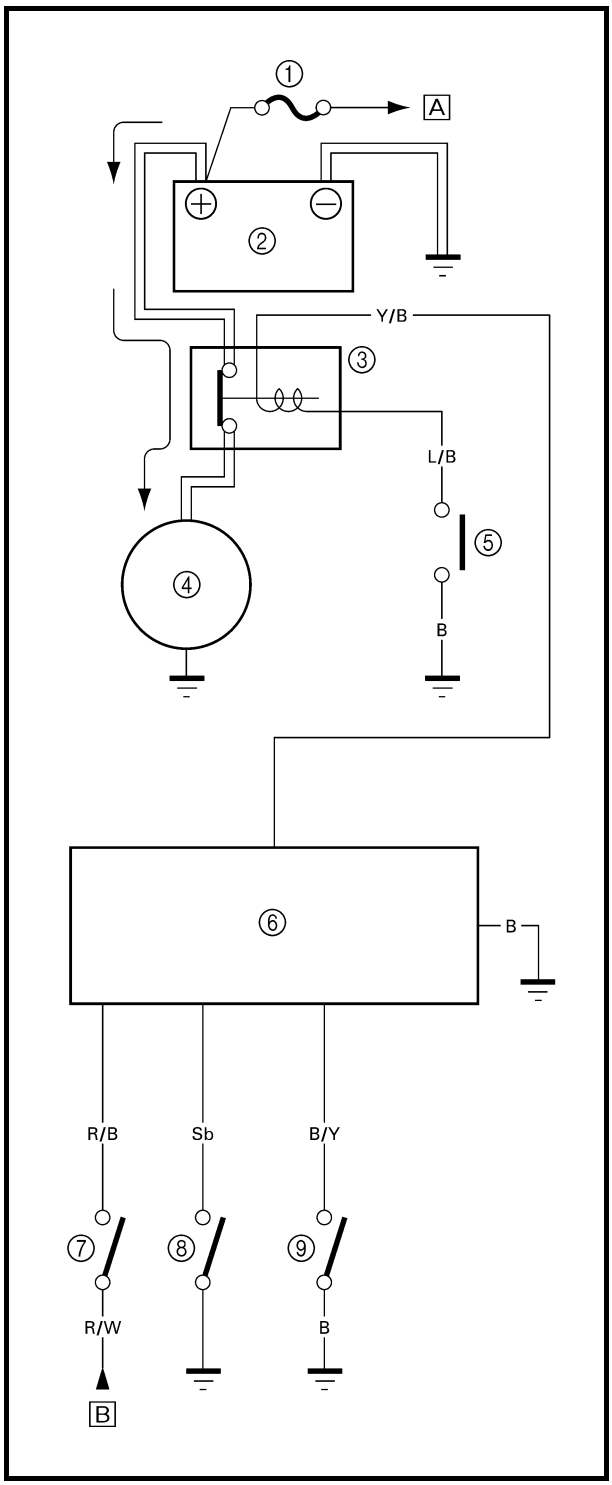

STARTING CIRCUIT OPERATION

The starting circuit on this model consists of the starter motor, starter relay, clutch switch, CDI unit and neutral switch. If the main switch is on and the engine stop switch is in the RUN position, the starter motor can be operated only if:

- The transmission is in neutral (the neutral switch is closed).

or

- You pull in the clutch lever (the clutch switch is closed).

① Fuse
② Battery
③ Starter relay
④ Starter motor
⑤ Start switch
⑥ CDI unit
⑦ Engine stop switch
⑧ Neutral switch
⑨ Clutch switch
A TO MAIN SWITCH
B FROM MAIN SWITCH

EB803020
TROUBLESHOOTING

IF THE STARTER MOTOR FAILS TO OPERATE:

Procedure
Check:
1. Fuse
2. Battery
3. Starter motor
4. Starter relay
5. Main switch
6. Engine stop switch
7. Start switch
8. Neutral switch
9. Clutch switch
10. Wiring connection (the entire starting system)

NOTE:
- Remove the following part(s) before troubleshooting:
1) Seat
2) Front fender
3) Rear fender
4) Exhaust pipe
- Use the following special tool(s) for troubleshooting.

Pocket tester:
P/N. YU-03112, 90890-03112

EB802011

1.Fuse
Refer to “CHECKING THE SWITCH”.

NO CONTINUITY → Replace the fuse.

CONTINUITY ↓

EB802012

2.Battery
• Check the battery condition. Refer to “CHECKING THE BATTERY” in CHAPTER 3.
Open-circuit voltage: 12.8 V or more at 20 °C (68 °F)

INCORRECT →
- Clean the battery terminals.
- Recharge or replace the battery.

CORRECT ↓
*

*

3.Starter motor

- Connect the battery positive terminal ① and starter motor cable ② using a jumper lead ③ *.
- Check the operation of the starter motor.

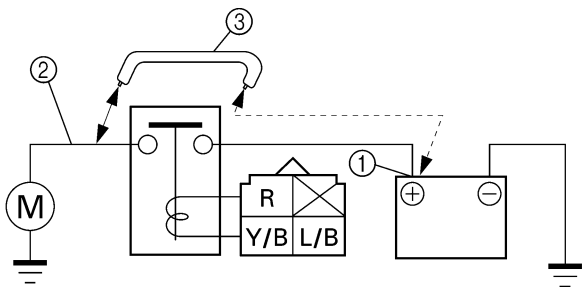

*

⚠ WARNING

- **A wire that is used as a jumper lead must have the equivalent capacity or more as that of the battery lead, otherwise the jumper lead may burn.**
- **This check is likely to produce sparks, so be sure that no flammable gas or fluid is in the vicinity.**

DOES NOT TURN

Repair or replace the starter motor.

TURNS

4.Starter relay

- Remove the starter relay from the wire harness.
- Connect the pocket tester (Ω × 1) and the battery (12 V) to the starter relay terminals.

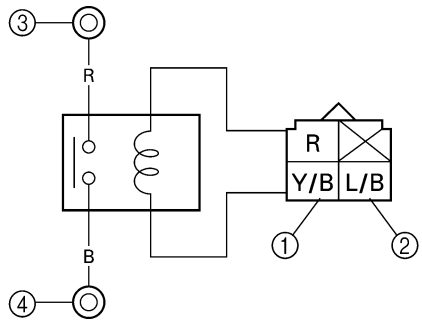

Battery (+) terminal → Yellow/Black terminal ①
Battery (–) terminal → Blue/Black terminal ②

Tester (+) lead → Red terminal ③
Tester (–) lead → Black terminal ④

- Check the starter relay for continuity.

NO CONTINUITY

Replace the starter relay.

CONTINUITY

5.Main switch

Refer to “CHECKING THE SWITCH”.

INCORRECT

Replace the main switch.

CORRECT

*

*

6.Engine stop switch

Refer to “CHECKING THE SWITCH”.

INCORRECT → Replace the handlebar switch (right).

CORRECT ↓

7.Start switch

Refer to “CHECKING THE SWITCH”.

INCORRECT → Replace the handlebar switch (left).

CORRECT ↓

8.Neutral switch

Refer to “CHECKING THE SWITCH”.

INCORRECT → Replace the neutral switch.

CORRECT ↓

9.Clutch switch

Refer to “CHECKING THE SWITCH”.

INCORRECT → Replace the clutch switch.

CORRECT ↓

EB803028

10.Wiring connection

- Check the connections of the entire starting system.
  Refer to “CIRCUIT DIAGRAM”.

POOR CONNECTION → Properly connect the starting system.

STARTER MOTOR

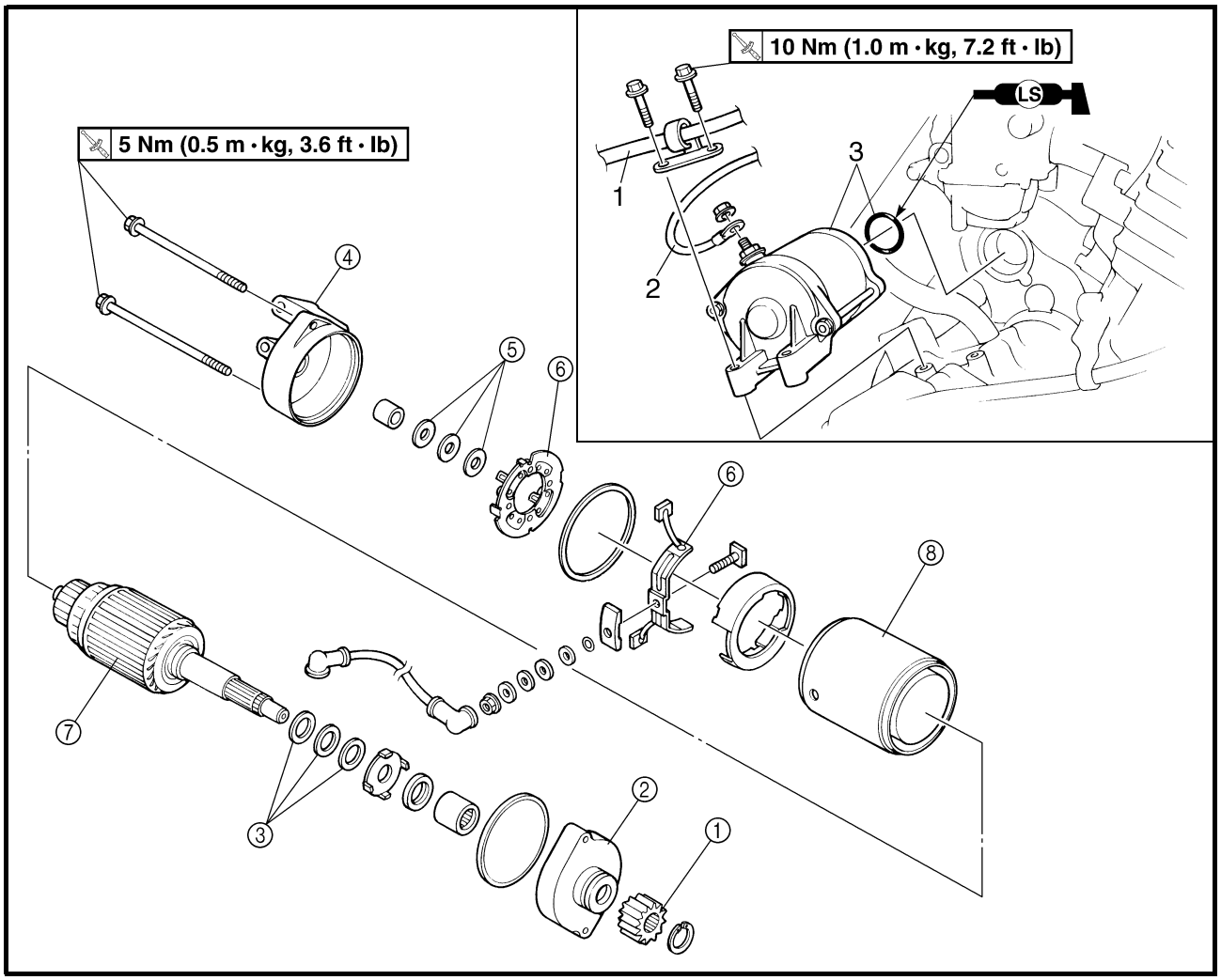

Order	Job name/Part name	Q'ty	Remarks
	Removing the starter motor		Remove the parts in the order below.
	Exhaust pipe		Refer to "ENGINE REMOVAL".
1	Parking brake cable	1	Disconnect.
2	Starter motor lead	1	
3	Starter motor/O-ring	1/1	
	Disassembling the starter motor		Remove the parts in the order below.
①	Starter motor drive gear	1	
②	Bracket 1	1	
③	Washer kit		
④	Bracket 2	1	
⑤	Shims		Refer to "ASSEMBLING THE STARTER MOTOR".
⑥	Brush seat 1/brush seat 2	1/1	
⑦	Armature coil	1	
⑧	Yoke	1	
			For assembly, reverse the disassembly procedure.

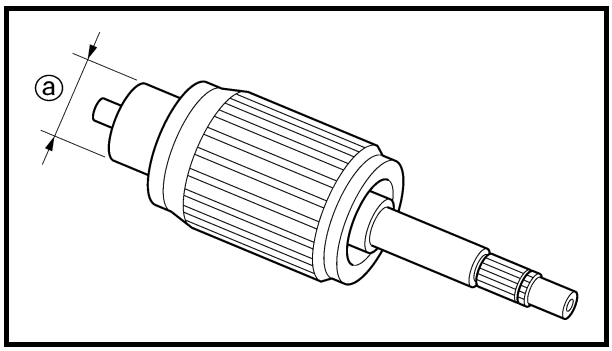

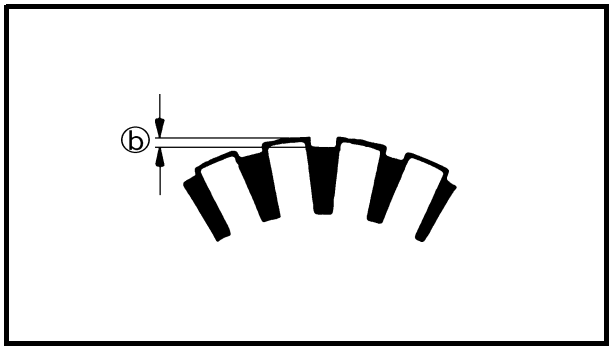

CHECKING THE STARTER MOTOR

1.Check:
- Commutator
  Dirty → Clean it with #600 grit sandpaper.

2.Measure:
- Commutator diameter ⓐ
  Out of specification → Replace the starter motor.

Outside diameter:
28 mm (1.10 in)
<Wear limit:>
27 mm (1.06 in)

3.Measure:
- Mica undercut ⓑ
  Out of specification → Scrape the mica using a hacksaw blade.

Mica undercut:
0.7 mm (0.03 in)

NOTE:
Scrape the mica to the proper measurement using a hacksaw blade which has been grounded to fit the commutator.

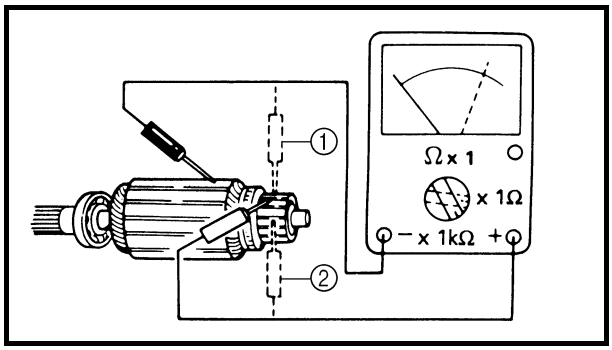

4.Check:
- Armature coil (insulation/continuity)
  Defects → Replace the starter motor.

****

Armature coil checking steps:
- Connect the pocket tester for the continuity check ① and insulation check ②.
- Measure the armature resistances.

Armature coil resistance:
Continuity check ①:
0.025 ~ 0.035 Ω at 20 °C (68 °F)
Insulation check ②:
More than 1 MΩ at 20 °C (68 °F)

- If the resistance is incorrect, replace the starter motor.

****

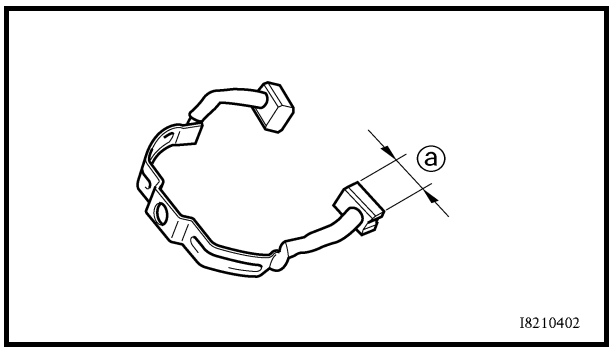

5.Measure:
- Brush length ⓐ (each)
  Out of specification → Replace the brush.

Brush length:
12.5 mm (0.49 in)
<Wear limit:>
5 mm (0.20 in)

6.Measure:
- Brush spring force
  Fatigue/out of specification → Replace as a set.

Brush spring force:
7.65 ~ 10.01 Nm
(27.5 ~ 36.0 oz)

7.Check:
- Oil seal
- Bushing
- O-rings
  Wear/damage → Replace.

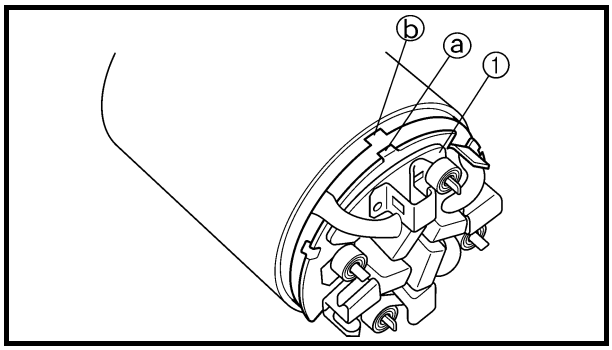

ASSEMBLING THE STARTER MOTOR

1.Install:
- Brush seat ①

NOTE:
Align the projection ⓐ on the brush seat with the slot ⓑ on the housing.

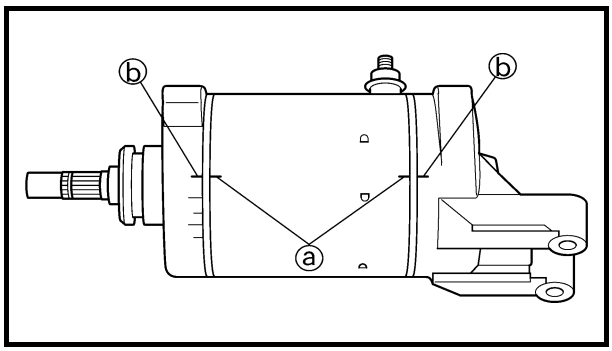

2.Install:
- Yoke
- Brackets

NOTE:
Align the match marks ⓐ on the yoke with the match marks ⓑ on the brackets.

EB804000

CHARGING SYSTEM

CIRCUIT DIAGRAM

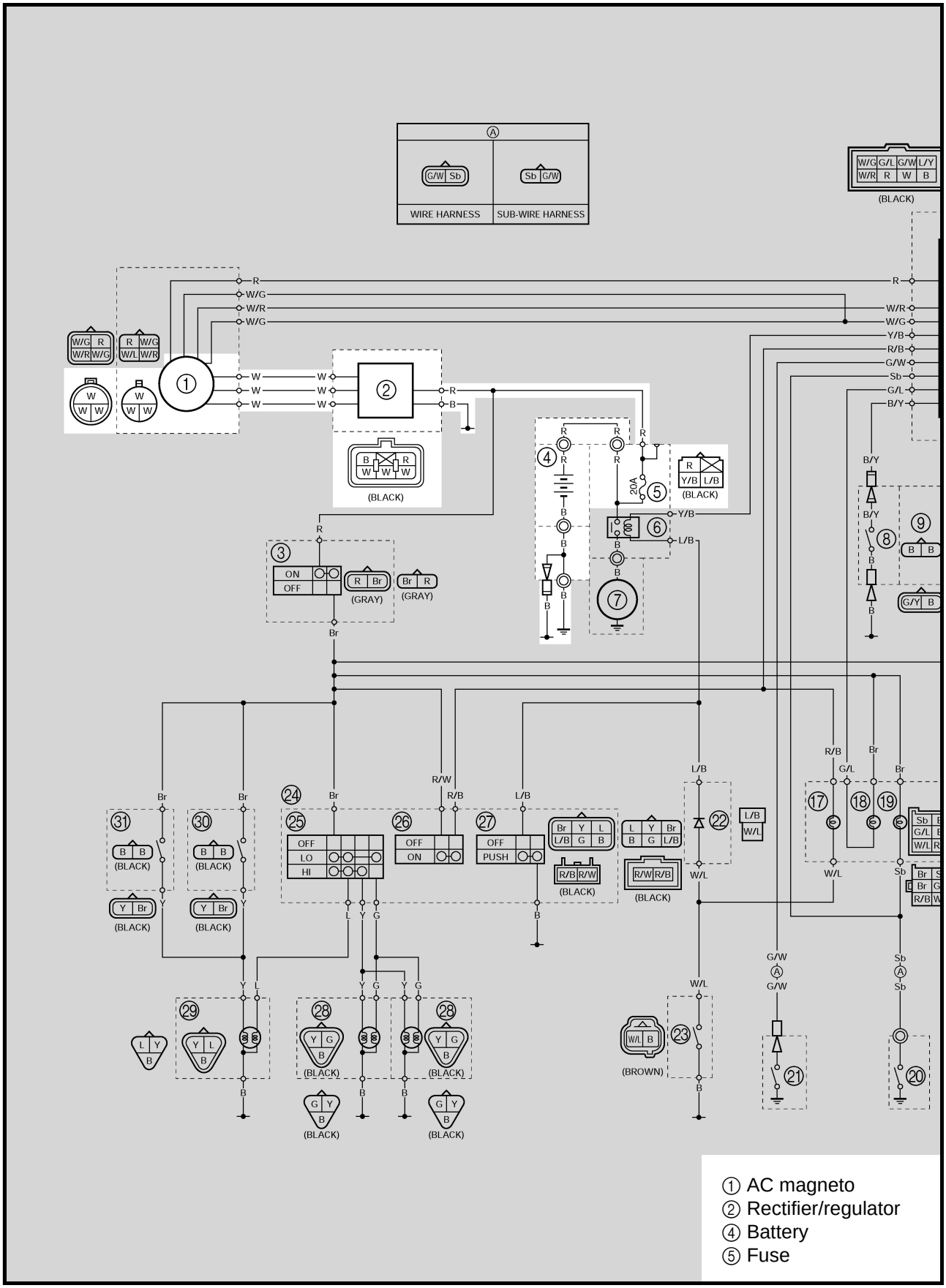

EB804010
TROUBLESHOOTING

IF THE BATTERY IS NOT CHARGED:

Procedure
Check:
1.Fuse
2.Battery
3.Charging voltage
4.Charging coil resistance
5.Wiring connections
(the entire charging system)

NOTE:
- Remove the following part(s) before trouble-shooting:
1)Seat
- Use the following special tool(s) for trouble-shooting.

Pocket tester:
P/N. YU-03112, 90890-03112

EB802011
1.Fuse

Refer to “CHECKING THE SWITCH”.

NO CONTINUITY → Replace the fuse.

CONTINUITY ↓

EB802012
2.Battery

- Check the battery condition.
Refer to “CHECKING THE BATTERY” in CHAPTER 3.

Open-circuit voltage:
12.8 V or more at 20 °C (68 °F)

INCORRECT →
- Clean the battery terminals.
- Recharge or replace the battery.

CORRECT ↓

EB804011
3.Charging voltage

- Connect the tachometer to the spark plug lead.
- Connect the pocket tester (DC 20V) to the battery.

Tester (+) lead → Battery (+) terminal
Tester (–) lead → Battery (–) terminal

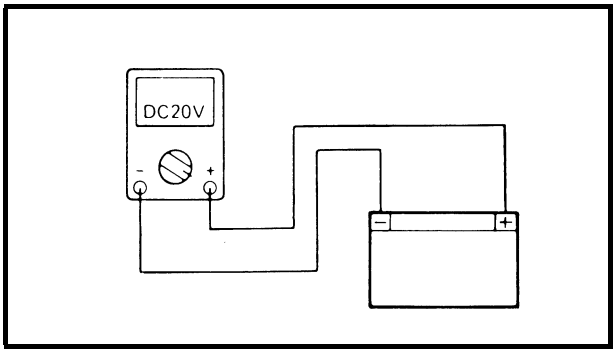

- Start the engine and accelerate to about 5,000 r/min.

Charging voltage:
14 V at 5,000 r/min

MEETS SPECIFICATION

The charging circuit is not faulty.

OUT OF SPECIFICATION

EB804012

4.Charging coil resistance

- Disconnect the AC magneto coupler from the wire harness.
- Connect the pocket tester (Ω × 1) to the charging coils.

Tester (+) lead → White terminal ①
Tester (–) lead → White terminal ②

Tester (+) lead → White terminal ①
Tester (–) lead → White terminal ③

Tester (+) lead → White terminal ②
Tester (–) lead → White terminal ③

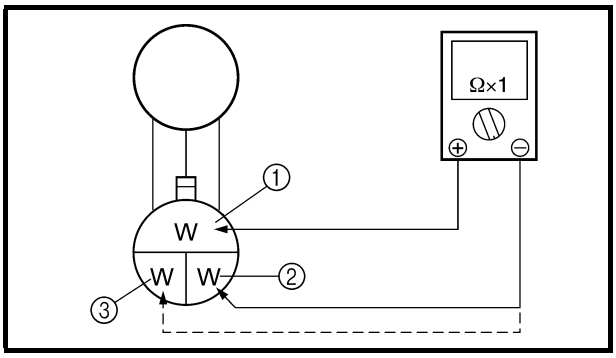

- Measure the stator coil resistance.

Charging coil resistance:
0.43 ~ 0.65 Ω at 20 °C (68 °F)

OUT OF SPECIFICATION

Replace the pickup coil/stator assembly.

MEETS SPECIFICATION

EB804015

5.Wiring connections

- Check the connections of the entire charging system.
  Refer to “CIRCUIT DIAGRAM”.

POOR CONNECTION

Properly connect the charging system.

CORRECT

Replace the rectifier/regulator.

EB805000

LIGHTING SYSTEM

CIRCUIT DIAGRAM

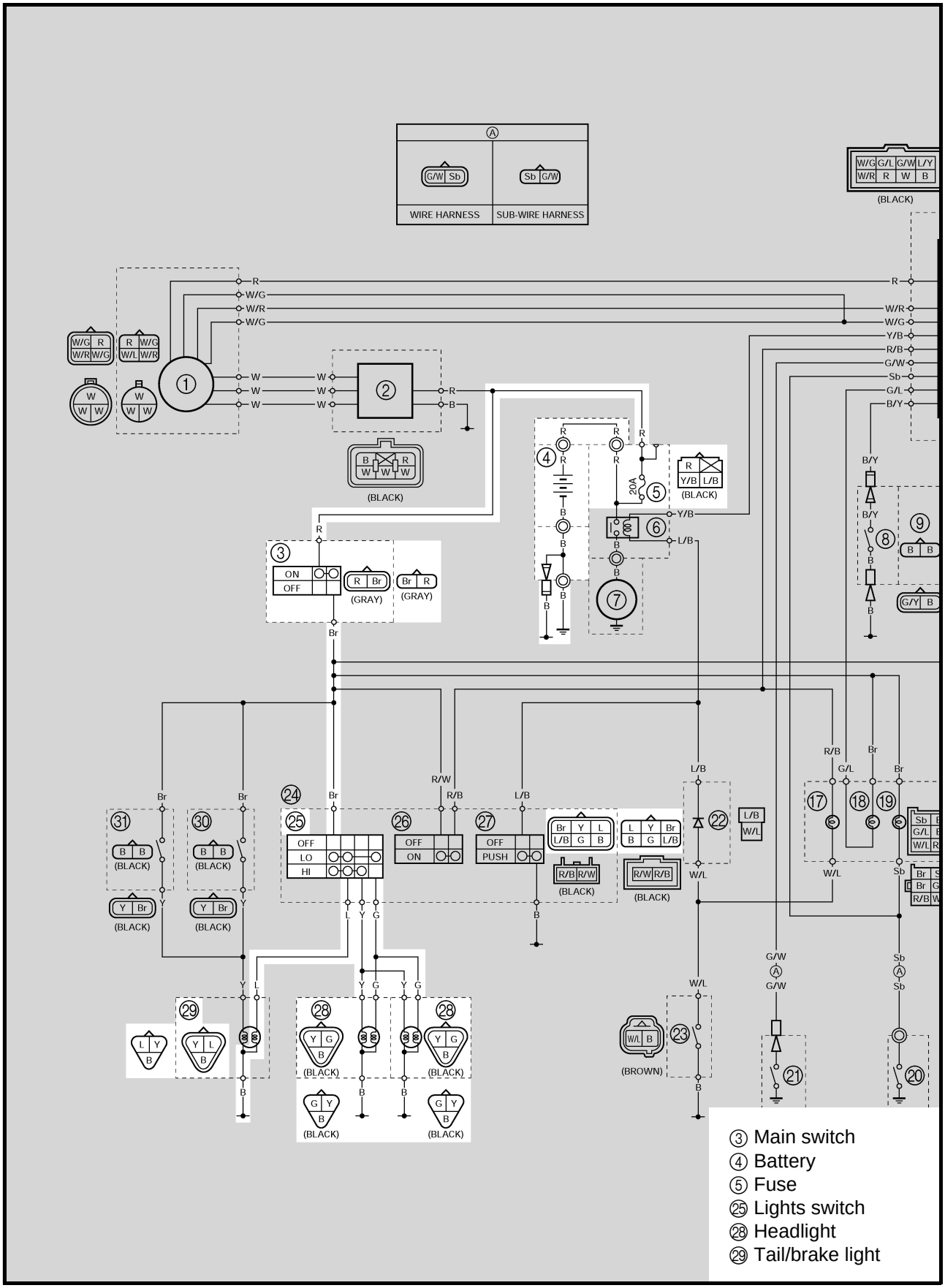

EB805010
TROUBLESHOOTING

IF THE HEADLIGHT AND/OR TAIL/BRAKE LIGHT FAIL TO COME ON:

Procedure
Check:
1.Fuse
2.Battery
3.Main switch
4.Lights switch
5.Wiring connections
(the entire lighting system)

NOTE:
- Remove the following part(s) before trouble-shooting:
1)Seat
2)Front fender
- Use the following special tool(s) for trouble-shooting.

Pocket tester:
P/N. YU-03112, 90890-03112

EB802011
1.Fuse
Refer to “CHECKING THE SWITCH”.

NO CONTINUITY → Replace the fuse.

CONTINUITY ↓

EB802012
2.Battery
- Check the battery condition.
Refer to “CHECKING THE BATTERY” in CHAPTER 3.

Open-circuit voltage:
12.8 V or more at 20 °C (68 °F)

INCORRECT →
- Clean the battery terminals.
- Recharge or replace the battery.

CORRECT ↓
*

*

3.Main switch

Refer to “CHECKING THE SWITCH”.

INCORRECT → Replace the main switch.

CORRECT ↓

4.Lights switch

Refer to “CHECKING THE SWITCH”.

INCORRECT → Lights switch is faulty, replace the handlebar switch (left).

CORRECT ↓

EB805013

5.Wiring connection

- Check the connections of the entire lighting system.
  Refer to “WIRING DIAGRAM”.

POOR CONNECTION → Properly connect the lighting system.

CORRECT ↓

Check the condition of each of the lighting system’s circuits.
Refer to “CHECKING THE LIGHTING SYSTEM”.

EB805020

CHECKING THE LIGHTING SYSTEM

1.If the headlights fail to come on:

1.Bulb and bulb socket

- Check the bulb and bulb socket for continuity.

NO CONTINUITY → Replace the bulb and/or bulb socket.

CONTINUITY ↓

2.Voltage

- Connect the pocket tester (DC 20V) to the headlight couplers.

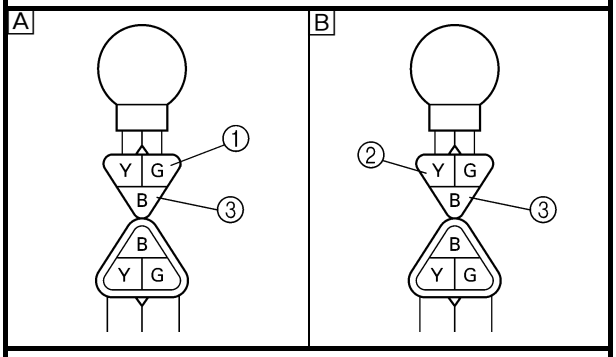

Tester (+) lead →
Green terminal ① or Yellow terminal ②
Tester (–) lead → Black terminal ③

A When the lights switch is on “LO”.
B When the lights switch is on “HI”.

- Turn the main switch to “ON”.
- Turn the lights switch to “LO” or “HI”.
- Check the voltage (12 V) of the “Green” and “Yellow” leads on the bulb socket connector.

OUT OF SPECIFICATION → The wiring circuit from the main switch to the bulb socket connector is faulty, repair it.

MEETS SPECIFICATION ↓

This circuit is not faulty.

EB805021

2.If the tail/brake light fails to come on:

1.Bulb and bulb socket

- Check the bulb and bulb socket for continuity.

NO CONTINUITY → Replace the bulb and/or bulb socket.

CONTINUITY ↓

2.Voltage

- Connect the pocket tester (20 V) to the bulb socket coupler.

Tester (+) lead → Blue terminal ①
Tester (–) lead → Black terminal ②

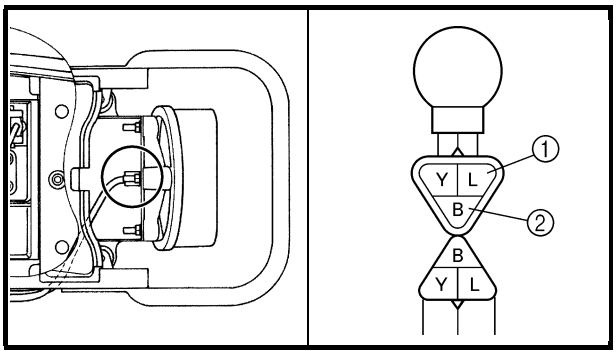

- Turn the main switch to “ON”.
- Turn the lights switch to “LO” or “HI”.
- Check the voltage (12 V) of the “Blue” lead on the bulb socket connector.

OUT OF SPECIFICATION → The wiring circuit from the main switch to the bulb socket connector is faulty, repair it.

MEETS SPECIFICATION ↓

This circuit is not faulty.

EB806000

SIGNAL SYSTEM

CIRCUIT DIAGRAM

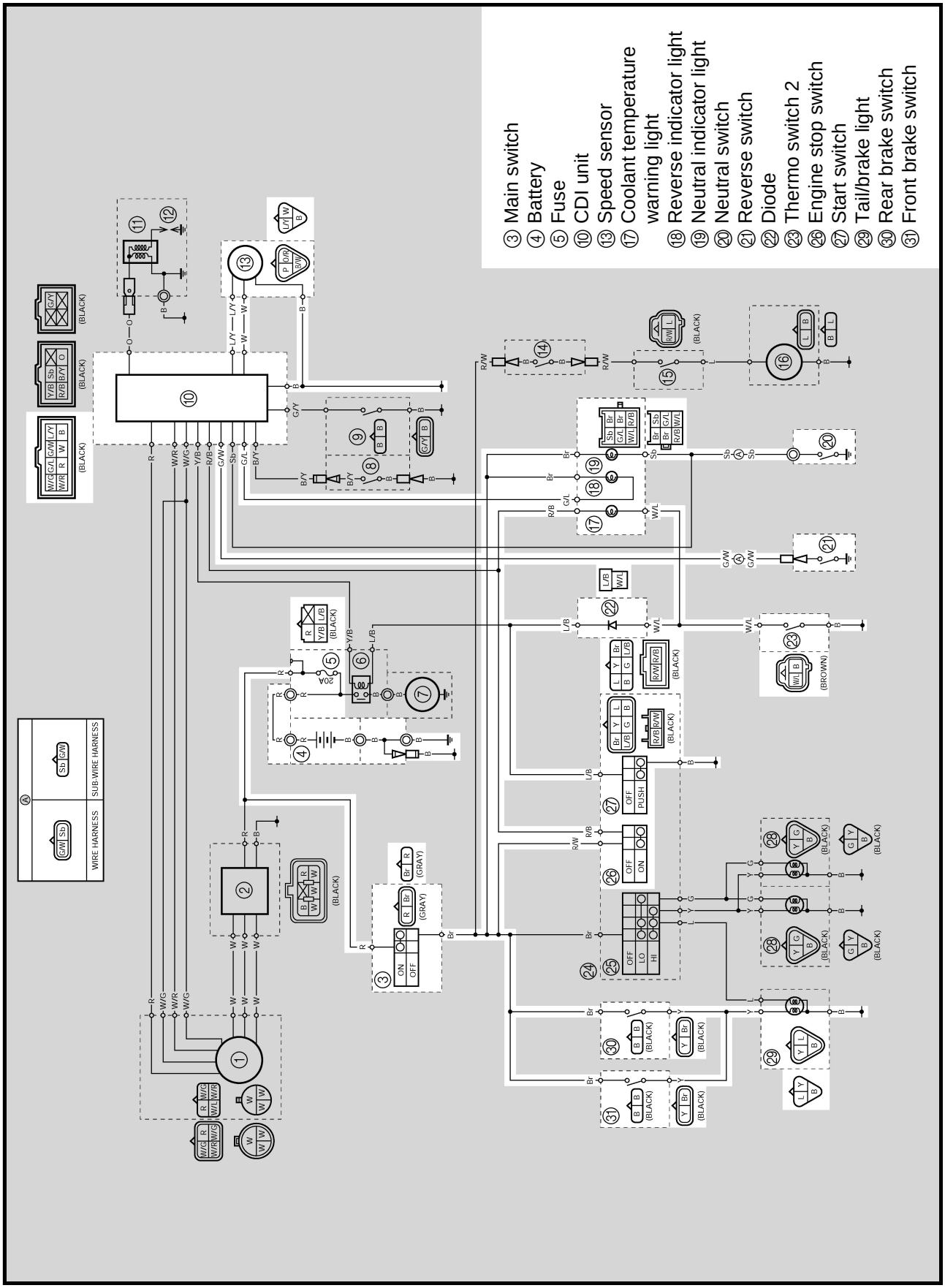

EB806010
TROUBLESHOOTING

IF THE TAIL/BRAKE LIGHT AND/OR INDICATOR LIGHT FAILS TO COME ON:

Procedure
Check:
1.Fuse
2.Battery
3.Main switch
4.Wiring connections
(the entire signal system)

NOTE:
- Remove the following part(s) before trouble-shooting:
1)Seat
2)Front fender
3)Rear fender
- Use the following special tool(s) for trouble-shooting.

Pocket tester:
P/N. YU-03112, 90890-03112

EB802011

1.Fuse
Refer to “CHECKING THE SWITCH”.

NO CONTINUITY → Replace the fuse.

CONTINUITY ↓

EB802012

2.Battery
• Check the battery condition. Refer to “CHECKING THE BATTERY” in CHAPTER 3.
Open-circuit voltage: 12.8 V or more at 20 °C (68 °F)

INCORRECT →
- Clean the battery terminals.
- Recharge or replace the battery.

CORRECT ↓
*

*

3.Main switch

Refer to “CHECKING THE SWITCH”.

INCORRECT → Replace the main switch.

CORRECT

EB806011

4.Wiring connections

- Check the connections of the entire signal system.
  Refer to “CIRCUIT DIAGRAM”.

POOR CONNECTION → Properly connect the signal system.

CORRECT

Check the condition of each of the signal system’s circuits.
Refer to “CHECKING THE SIGNAL SYSTEM”.

CHECKING THE SIGNAL SYSTEM

1.If the tail/brake light fails to come on:

1.Bulb and bulb socket

- Check the bulb and bulb socket for continuity.

NO CONTINUITY → Replace the bulb and/or bulb socket.

CONTINUITY ↓

2.Brake switches

Refer to “CHECKING THE SWITCH”.

NO CONTINUITY → Replace the brake switch.

CONTINUITY ↓

3.Voltage

- Connect the pocket tester (DC 20V) to the bulb socket coupler.

Tester (+) lead → Yellow terminal ①
Tester (–) lead → Black terminal ②

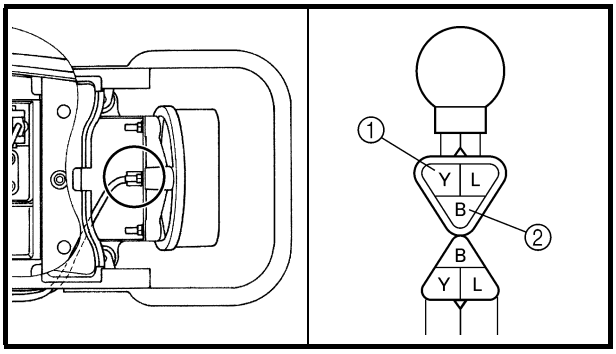

- Turn the main switch to “ON”.
- Turn the lights switch to “LO” or “HI”.
- Check the voltage (12 V) of the “Yellow” lead on the bulb socket connector.

OUT OF SPECIFICATION → The wiring circuit from the main switch to the bulb socket connector is faulty, repair it.

MEETS SPECIFICATION ↓

This circuit is not faulty.

EB806024

2.If the neutral indicator light fails to come on:

1.Bulb and bulb socket

- Check the bulb and bulb socket for continuity.

NO CONTINUITY → Replace the bulb and/or bulb socket.

CONTINUITY ↓

2.Neutral switch

Refer to “CHECKING THE SWITCH”.

NO CONTINUITY → Replace the neutral switch.

CONTINUITY ↓

3.Voltage

- Connect the pocket tester (DC 20V) to the bulb socket coupler.

Tester (+) lead → Brown terminal ①
Tester (–) lead → Sky blue terminal ②

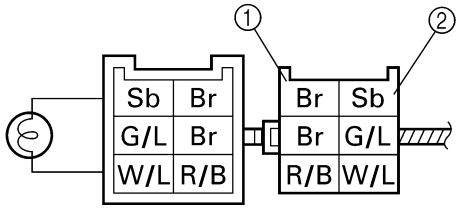

- Turn the main switch to “ON”.
- Check the voltage (12 V).

OUT OF SPECIFICATION → The wiring circuit from the main switch to the bulb socket connector is faulty, repair it.

MEETS SPECIFICATION ↓

This circuit is not faulty.

3.If the reverse indicator light fails to come on:

1.Bulb and bulb socket

- Check the bulb and bulb socket for continuity.

NO CONTINUITY → Replace the bulb and/or bulb socket.

CONTINUITY ↓

2.Reverse switch

Refer to “CHECKING THE SWITCH”.

NO CONTINUITY → Replace the reverse switch.

CONTINUITY ↓

3.Voltage

- Connect the pocket tester (DC 20V) to the bulb socket coupler.

Tester (+) lead → Brown terminal ①
Tester (–) lead → Green/Blue terminal ②

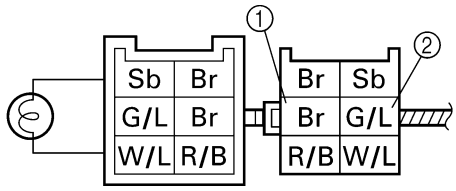

- Turn the main switch to “ON”.
- Check the voltage (12 V).

OUT OF SPECIFICATION → The wiring circuit from the main switch to the bulb socket connector is faulty, repair it.

MEETS SPECIFICATION ↓

This circuit is not faulty.

4.If the coolant temperature warning light does not come on when the start switch is pushed on, or if the coolant temperature warning light does not come on when the temperature is high (more than 117 ~ 123 °C (242.6 ~ 253.4 °F)):

1.Bulb and bulb socket

- Check the bulb and bulb socket for continuity.

NO CONTINUITY → Replace the bulb and/or bulb socket.

CONTINUITY ↓

2.Thermo switch 2

- Remove the thermo switch from the thermostat housing.
- Connect the pocket tester (Ω × 1) to the thermo switch ①.
- Immerse the thermo switch in coolant ②.
- Check the thermo switch for continuity. While heating the coolant use a thermometer ③ to record the temperatures.

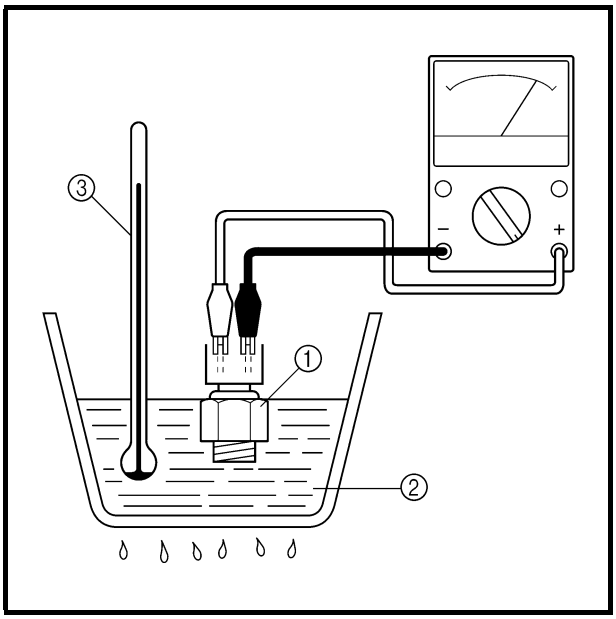

Test step	Water temperature / Thermo switch	Good condition
1	0 ~ 115 ± 3 °C (32 ~ 239 ± 5.4 °F)	×
2	More than 120 ± 3 °C (248 ± 5.4 °F)	○
3*	120 ± 3 to 115 ± 3 °C (248 ± 5.4 to 239 ± 5.4 °F)	○
4*	Less than 115 ± 3 °C (239 ± 5.4 °F)	×

Tests 1 & 2; Heat-up tests
Tests 3* & 4*; Cool-down tests
○: Continuity ×: No continuity

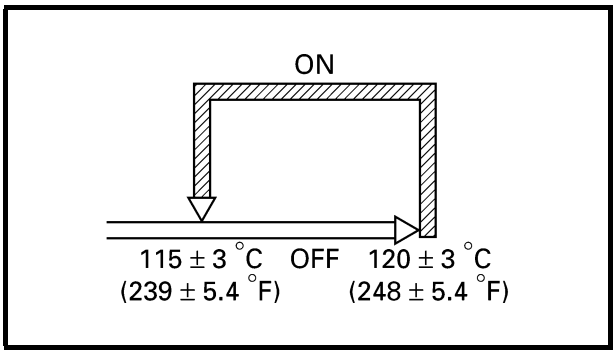

⚠ WARNING

Handle the thermo switch with special care.
Never subject it to a strong shock or allow it to be dropped. Should it be dropped, it must be replaced.

Thermo switch:
2.8 Nm (2.8 m • kg, 20 ft • lb)
Three bond sealock® #10

BAD CONDITION → Replace the thermo switch 2.

GOOD CONDITION ↓
*

*

3.Voltage
• Connect the pocket tester (DC 20V) to the bulb socket coupler.
Tester (+) lead → Red/Black terminal ① **Tester (–) lead → White/Blue terminal ②**

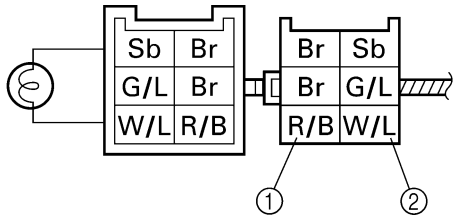

- Turn the main switch to "ON".
- Check the voltage (12 V).

OUT OF SPECIFICATION

The wiring circuit from the main switch to the bulb socket connector is faulty, repair it.

MEETS SPECIFICATION

4.Diode	
• Remove the diode from the coupler. • Connect the pocket tester (Ω × 1) to the diode terminals as shown. • Check the diode for continuity as follows.	
Tester positive probe → Blue/Black ① **Tester negative probe → White/Blue ②**	**Continuity**
Tester positive probe → White/Blue ② **Tester negative probe → Blue/Black ①**	**No continuity**

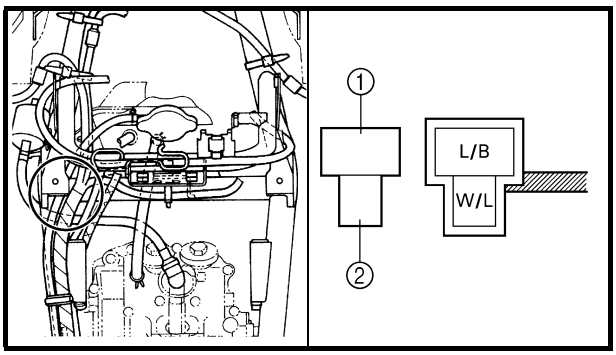

NOTE:
When you switch the tester's positive and negative probes, the readings in the left chart will be reversed.

INCORRECT

Replace the diode.

CORRECT

*

*

5.Start switch

Refer to “CHECKING THE SWITCH”.

INCORRECT

Replace the handlebar switch (left).

CORRECT

This circuit is not faulty.

COOLING SYSTEM

CIRCUIT DIAGRAM

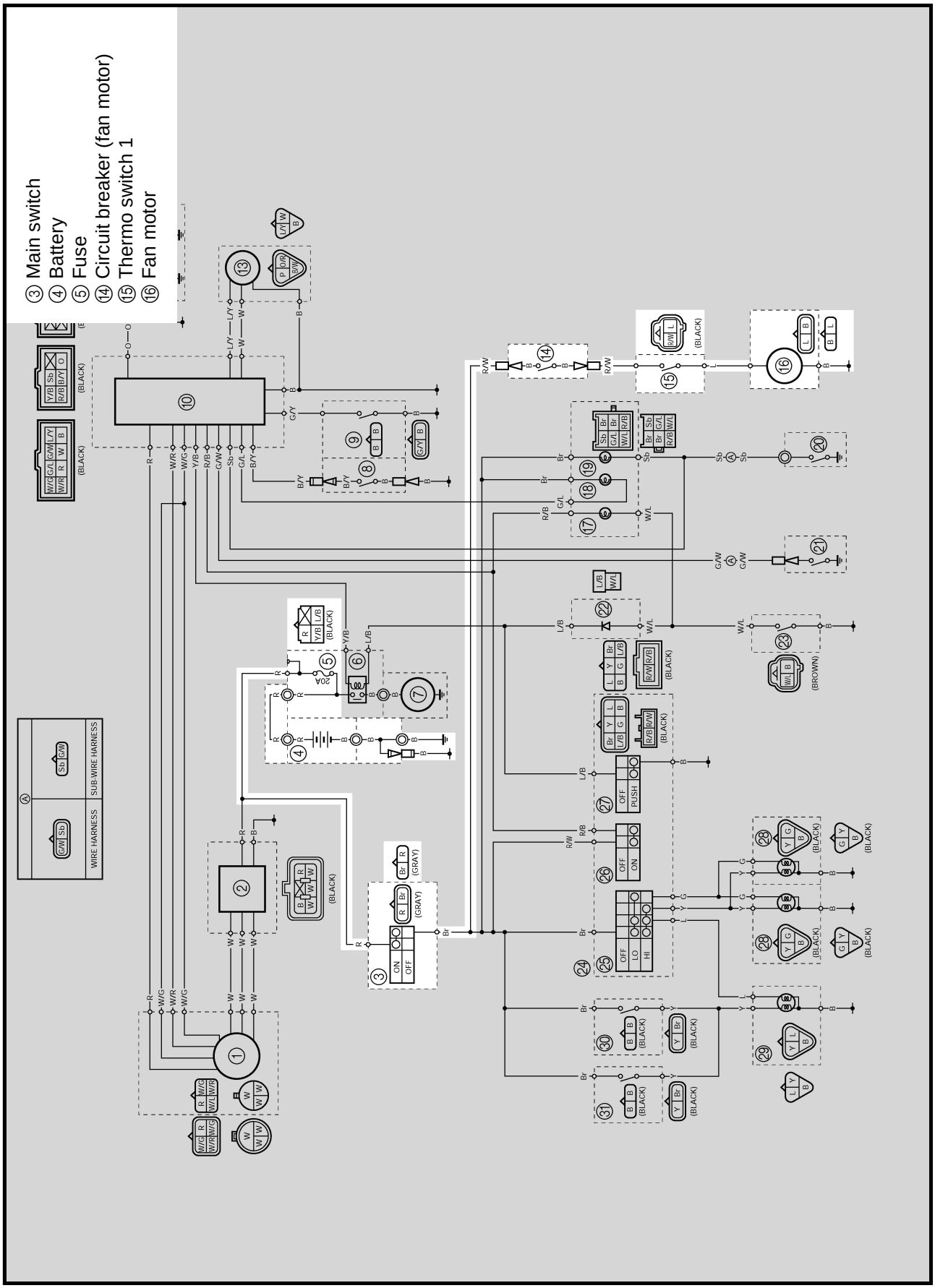

TROUBLESHOOTING

IF THE FAN MOTOR DOES NOT MOVE:

Procedure

Check:
1. Fuse
2. Battery
3. Main switch
4. Fan motor
5. Circuit breaker (fan motor)
6. Thermo switch 1
7. Wiring connection (the entire cooling system)

NOTE:
- Remove the following part(s) before trouble-shooting.
  1) Seat
  2) Front fender
- Use the following special tool(s) for trouble-shooting.

Pocket tester:
P/N. YU-03112, 90890-03112

EB802011

1.Fuse

Refer to "CHECKING THE SWITCH".

NO CONTINUITY → Replace the fuse.

CONTINUITY ↓

EB802012

2.Battery

- Check the battery condition.
  Refer to "CHECKING THE BATTERY" in CHAPTER 3.

Open-circuit voltage:
12.8 V or more at 20 °C (68 °F)

INCORRECT →
- Clean the battery terminals.
- Recharge or replace the battery.

CORRECT ↓

3.Main switch

Refer to "CHECKING THE SWITCH".

INCORRECT → Replace the main switch.

CORRECT ↓

*

*

4.Fan motor

- Disconnect the fan motor coupler.
- Connect the battery (12 V) as shown.

Battery (+) lead → Blue terminal ①
Battery (–) lead → Black terminal ②

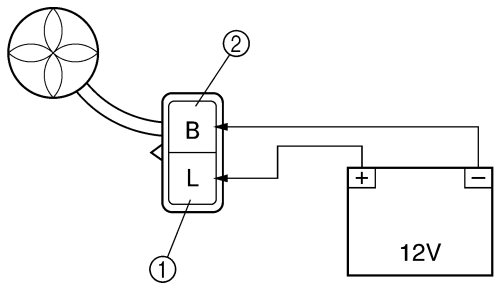

- Check the operation of the fan motor.

DOES NOT TURN

Replace the fan motor.

TURNS

5.Circuit breaker (fan motor)

- Remove the circuit breaker from the wire harness.
- Connect the pocket tester (Ω × 1) to the circuit breaker.

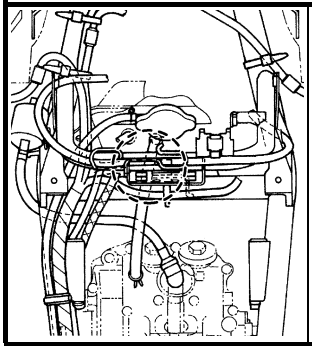

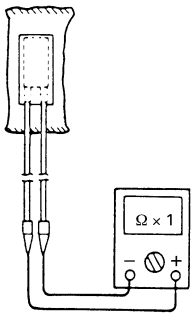

Circuit breaker resistance:
Zero Ω at 20 °C (68 °F)

OUT OF SPECIFICATION

Replace the circuit breaker.

MEETS SPECIFICATION

*

*

6.Thermo switch 1

- Remove the thermo switch from the radiator.
- Connect the pocket tester (Ω × 10) to the thermo switch ①.
- Immerse the thermo switch in coolant ②.
- Check the thermo switch for continuity. While heating the coolant use a thermometer ③ to record the temperatures.

Test step	Water temperature / Thermo switch	Good condition
1	0 ~ 92 ± 3 °C (32 ~ 197.6 ± 5.4 °F)	×
2	More than 98 ± 3 °C (208.4 ± 5.4 °F)	○
3*	98 ± 3 to 92 ± 3 °C (208.4 ± 5.4 to 197.6 ± 5.4 °F)	○
4*	Less than 92 ± 3 °C (197.6 ± 5.4 °F)	×

Tests 1 & 2; Heat-up tests
Tests 3* & 4*; Cool-down tests
○: Continuity ×: No continuity

⚠ WARNING

Handle the thermo switch with special care.
Never subject it to a strong shock or allow it to be dropped. Should it be dropped, it must be replaced.

Thermo switch:
28 Nm (2.8 m • kg, 20 ft • lb)
Three bond sealock® #10

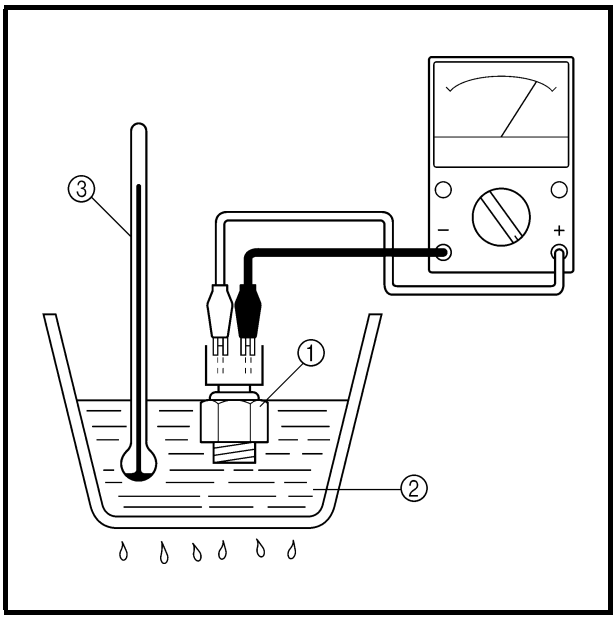

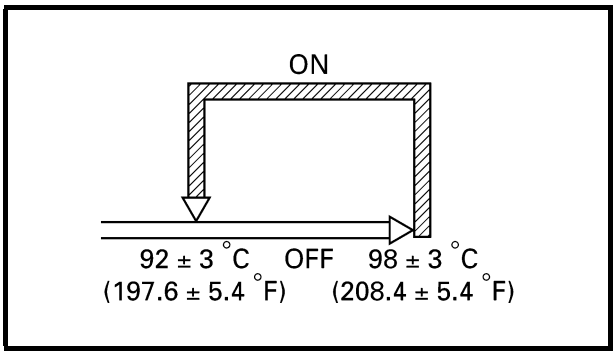

BAD CONDITION

Replace the thermo switch 1.

GOOD CONDITION

*

*

EB803028

7.Wiring connection

- Check the connections of the entire starting system.
  Refer to “CIRCUIT DIAGRAM”.

POOR CONNECTION → Properly connect the cooling system.

CORRECT → This circuit is not faulty.

?

TRBL
SHTG

9

CHAPTER 9.
TROUBLESHOOTING

TROUBLESHOOTING

NOTE:
The following troubleshooting does not cover all the possible causes of trouble. It should be helpful, however, as a guide to troubleshooting. Refer to the relative procedure in this manual for inspection, adjustment and replacement of parts.

STARTING FAILURE/HARD STARTING

FUEL SYSTEM

Fuel tank
- Empty
- Clogged fuel filter
- Clogged fuel strainer
- Clogged fuel breather hose
- Deteriorated or contaminated fuel

Fuel cock
- Clogged fuel hose

Carburetor
- Deteriorated or contaminated fuel
- Clogged pilot jet
- Clogged pilot air passage
- Sucked-in air
- Deformed float
- Worn needle valve
- Improperly sealed valve seat
- Improperly adjusted fuel level
- Improperly set pilot jet
- Clogged starter jet
- Starter plunger malfunction

Air filter
- Clogged air filter element

ELECTRICAL SYSTEM

Spark plug
- Improper plug gap
- Worn electrodes
- Wire between terminals broken
- Improper heat range
- Faulty spark plug cap

Ignition coil
- Broken or shorted primary/secondary
- Faulty spark plug lead
- Broken body

CDI system
- Faulty CDI unit
- Faulty pickup coil
- Broken woodruff key

Switches and wiring
- Faulty main switch
- Faulty engine stop switch
- Broken or shorted wiring
- Faulty neutral switch
- Faulty start switch
- Faulty clutch switch

Starter motor
- Faulty starter motor
- Faulty starter relay
- Faulty starter circuit cut-off relay
- Faulty starter clutch

Battery
- Faulty battery

COMPRESSION SYSTEM

Cylinder and cylinder head
- Loose spark plug
- Loose cylinder head or cylinder
- Broken cylinder head gasket
- Broken cylinder gasket
- Worn, damaged or seized cylinder

Valve, camshaft and crankshaft
- Improperly sealed valve
- Improperly contacted valve and valve seat
- Improper valve timing
- Broken valve spring
- Seized camshaft
- Seized crankshaft

Piston and piston rings
- Improperly installed piston ring
- Worn, fatigued or broken piston ring
- Seized piston ring
- Seized or damaged piston

Crankcase and crankshaft
- Improperly seated crankcase
- Seized crankshaft

Valve train
- Improperly adjusted valve clearance
- Improperly adjusted valve timing

POOR IDLE SPEED PERFORMANCE

POOR IDLE SPEED PERFORMANCE

Carburetor
- Improperly returned starter plunger
- Loose pilot jet
- Clogged pilot jet
- Clogged pilot air jet
- Improperly adjusted idle speed (Throttle stop screw)
- Improper throttle cable play
- Flooded carburetor

Electrical system
- Faulty spark plug
- Faulty CDI unit
- Faulty pickup coil
- Faulty ignition coil

Valve train
- Improperly adjusted valve clearance

Air filter
- Clogged air filter element

POOR MEDIUM AND HIGH-SPEED PERFORMANCE

POOR MEDIUM AND HIGH-SPEED PERFORMANCE

Refer to “STARTING FAILURE/HARD STARTING” and “POOR IDLE SPEED PERFORMANCE-VALVE TRAIN”.

Carburetor
- Improper jet needle clip position
- Improperly adjusted fuel level
- Clogged or loose main jet
- Deteriorated or contaminated fuel

Air filter
- Clogged air filter element

FAULTY GEAR SHIFTING

HARD SHIFTING

Refer to “CLUTCH DRAGGING”.

SHIFT PEDAL DOES NOT MOVE

Shift shaft
- Bent shift shaft

Shift drum and shift fork
- Groove jammed with impurities
- Seized shift fork
- Bent shift fork guide bar

Transmission
- Seized transmission gear
- Jammed impurities
- Incorrectly assembled transmission

Shift guide
- Broken shift guide

JUMP-OUT GEAR

Shift shaft
- Improperly adjusted shift lever position
- Improperly returned stopper lever

Shift fork
- Worn shift fork

Shift drum
- Improper thrust play
- Worn shift drum groove

Transmission
- Worn gear dog

CLUTCH SLIPPING/DRAGGING

CLUTCH SLIPPING

Clutch
- Loose clutch spring
- Fatigued clutch spring
- Worn friction plate
- Worn clutch plate
- Incorrectly assembled clutch

Engine oil
- Low oil level
- Improper quality (low viscosity)
- Deterioration

CLUTCH DRAGGING

Clutch
- Warped pressure plate
- Unevenly tensioned clutch springs
- Match marks not aligned
- Loose clutch boss nut
- Burnt primary driven gear bushing
- Bent clutch plate
- Swollen friction plate
- Broken clutch boss

Transmission oil
- High oil level
- Improper quality (high viscosity)
- Deterioration

OVERHEATING

OVERHEATING

Ignition system
- Improper spark plug gap
- Improper spark plug heat range
- Faulty CDI unit

Fuel system
- Improper carburetor main jet (improper setting)
- Improper fuel level
- Clogged air filter element

Compression system
- Heavy carbon deposit

Engine oil
- Improper oil level
- Improper oil viscosity
- Inferior oil quality

Brake
- Brake drag

Cooling system
- Low coolant level
- Clogged or damaged radiator
- Damaged or faulty water pump
- Thermostat stays closed

OVER COOLING

COOLING SYSTEM

Thermostat
- Thermostat stays open

FAULTY BRAKE

POOR BRAKING EFFECT

Disc brake
- Worn brake pads
- Worn disc
- Air in brake fluid
- Leaking brake fluid
- Faulty master cylinder kit cup
- Faulty caliper kit seal
- Loose union bolt
- Broken brake hose and pipe
- Oily or greasy disc/brake pads
- Improper brake fluid level

SHOCK ABSORBER MALFUNCTION

MALFUNCTION

- Bent or damaged damper rod
- Damaged oil seal lip
- Fatigued shock absorber spring

UNSTABLE HANDLING

UNSTABLE HANDLING

Handlebar

- Improperly installed or bent

Steering

- Incorrect toe-in
- Bent steering stem
- Improperly installed steering stem
- Damaged bearing or bearing race
- Bent tie rods
- Deformed steering knuckles

Tires

- Uneven tire pressures on both sides
- Incorrect tire pressure
- Uneven tire wear

Wheels

- Deformed wheel
- Loose bearing
- Bent or loose wheel axle
- Excessive wheel runout

Frame

- Bent
- Damaged frame

Swingarm

- Worn bearing or bushing
- Bent or damaged

LIGHTING SYSTEM

HEADLIGHT DARK

- Improper bulb
- Too many electric accessories
- Hard charging (broken charging coil and/or faulty rectifier/regulator)
- Incorrect connection
- Improperly grounded
- Poor contacts (main or lights switch)
- Bulb life expired

BULB BURNT OUT

- Improper bulb
- Faulty battery
- Faulty rectifier/regulator
- Improperly grounded
- Faulty main and/or lights switch
- Bulb life expired

YFM660R WIRING DIAGRAM

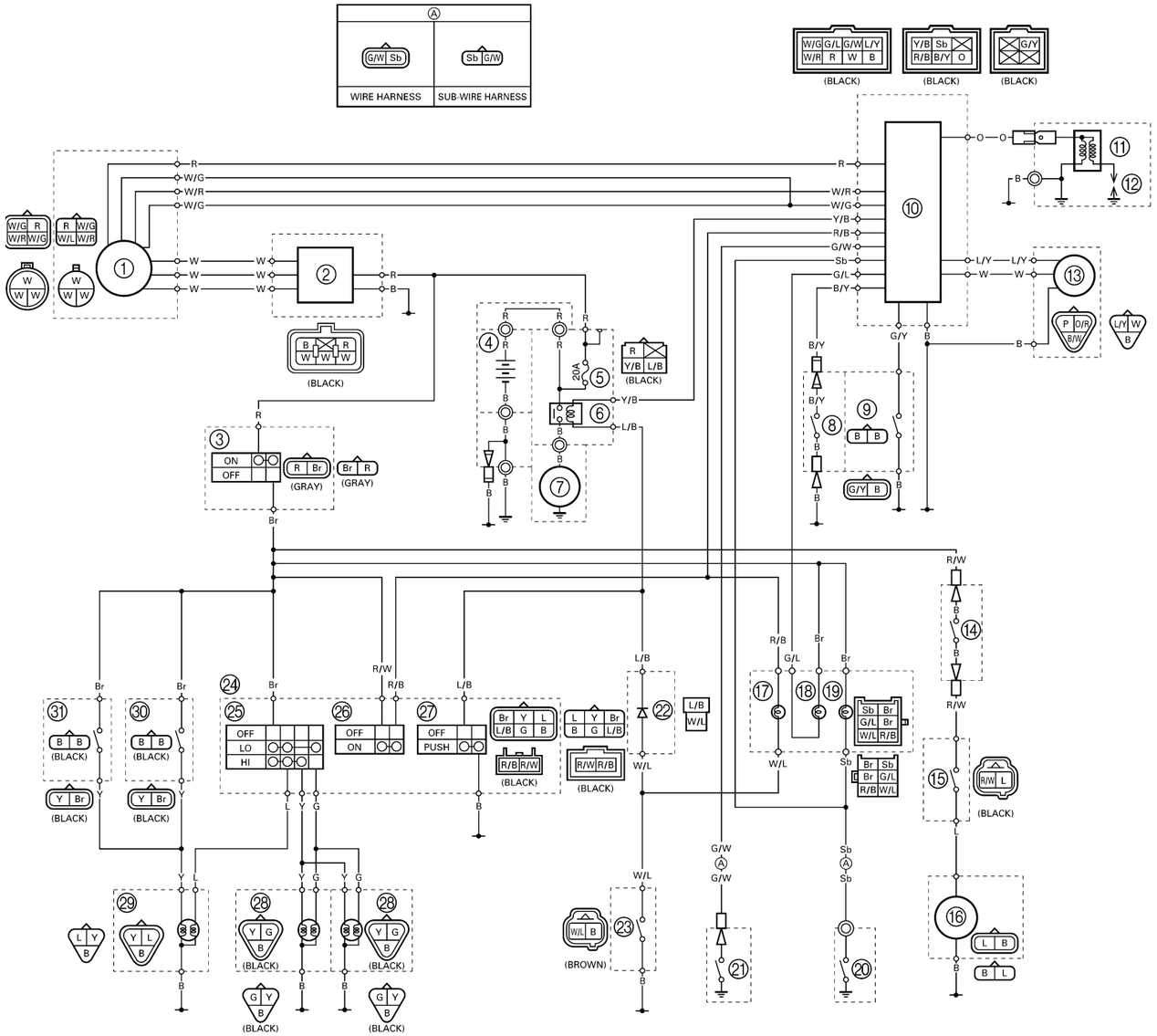

① AC magneto
② Rectifier/regulator
③ Main switch
④ Battery
⑤ Fuse
⑥ Starter relay
⑦ Starter motor
⑧ Clutch switch
⑨ Park switch
⑩ CDI unit
⑪ Ignition coil
⑫ Spark plug
⑬ Speed sensor
⑭ Circuit breaker (fan motor)
⑮ Thermo switch 1
⑯ Fan motor
⑰ Coolant temperature warning light
⑱ Reverse indicator light
⑲ Neutral indicator light
⑳ Neutral switch
㉑ Reverse switch
㉒ Diode
㉓ Thermo switch 2
㉔ Handlebar switch (left)
㉕ Lights switch
㉖ Engine stop switch
㉗ Start switch
㉘ Headlight
㉙ Tail/brake light
㉚ Rear brake switch
㉛ Front brake switch

COLOR CODE

B .....Black	W .....White	G/W.....Green/White	R/B ..... Red/Black
Br.....Brown	Y .....Yellow	G/Y.....Green/Yellow	R/W ..... Red/White
G.....Green	B/W.....Black/White	L/B .....Blue/Black	R/Y ..... Red/Yellow
L.....Blue	B/Y.....Black/Yellow	L/G .....Blue/Green	W/B ..... White/Black
O.....Orange	Br/L.....Brown/Blue	L/R .....Blue/Red	W/G..... White/Green
P .....Pink	Br/R .....Brown/Red	L/W .....Blue/White	W/L ..... White/Blue
R .....Red	Br/W.....Brown/White	L/Y .....Blue/Yellow	W/R ..... White/Red
Sb .....Sky blue	G/L.....Green/Blue	O/R .....Orange/Red	Y/B ..... Yellow/Black